FORTEC
ELEKTRONIK AG

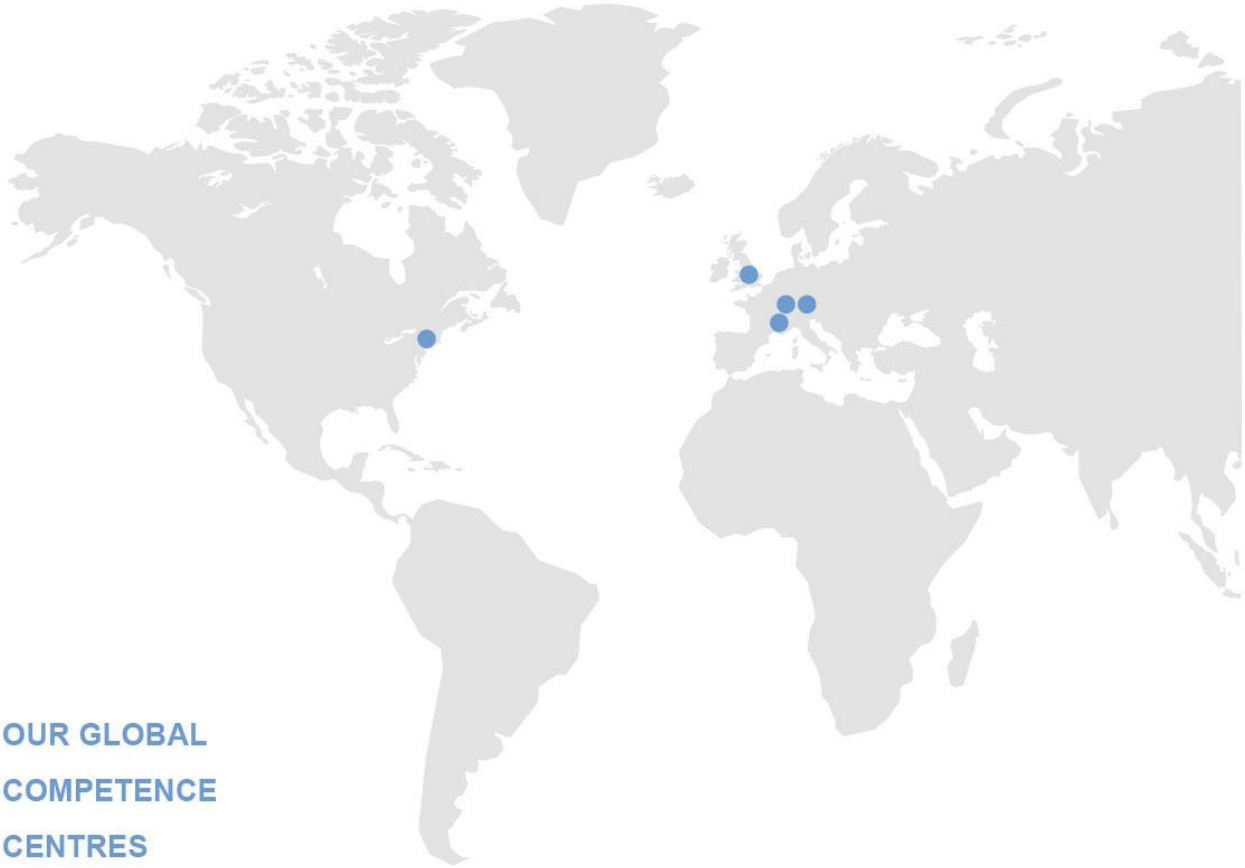

OUR GLOBAL COMPETENCE CENTRES

APOLLO DISPLAY TECHNOLOGIES

DISTEC

DISPLAY TECHNOLOGY

FORTEC
ELEKTRONIK AG

Datasheet

Tianma

NL8048AC21-01F

8.0" TFT Display

NL-01-004

PRELIMINARY

NLT Technologies

TFT COLOR LCD MODULE

NL8048AC21-01F

20cm (8.0 Type)
WVGA
LVDS interface (1port)

PRELIMINARY DATA SHEET

DOD-PP-1945 (4th edition)

This PRELIMINARY DATA SHEET is updated document from DOD-PP-1858(3).

All information is subject to change without notice. Please confirm the sales representative before starting to design your system.

INTRODUCTION

NLT does and will not assume any liability for infringement of patents, copyrights or other intellectual property rights of any third party arising out of or in connection with application of the products described herein except for that directly attributable to mechanisms and workmanship thereof. No license, express or implied, is granted under any patent, copyright or other intellectual property right of NLT.

Some electronic products would fail or malfunction at a certain rate. In spite of every effort to enhance reliability of products by NLT, the possibility of failures and malfunction might not be avoided entirely. To prevent the risks of damage to death, human bodily injury or other property arising out thereof or in connection therewith, each customer is required to take sufficient measures in its safety designs and plans including, but not limited to, redundant system, fire-containment and anti-failure.

The products are classified into three grades: **"Standard"**, **"Special"**, and **"Specific"**.
Each quality grade is designed for applications described below. Any customer who intends to use a product for application other than that of Standard is required to contact an NLT sales representative in advance.

The **Standard:** Applications as any failure, malfunction or error of the products are free from any damage to death, human bodily injury or other property (Products Safety Issue) and not related the safety of the public (Social Issues), like general electric devices.
Examples: Office equipment, audio and visual equipment, communication equipment, test and measurement equipment, personal electronic equipment, home electronic appliances, car navigation system (with no vehicle control functions), seat entertainment monitor for vehicles and airplanes, fish finder (except marine radar integrated type), PDA, etc.

The **Special:** Applications as any failure, malfunction or error of the products might directly cause any damage to death, human bodily injury or other property (Products Safety Issue) and the safety of the public (Social Issues) and required high level reliability by conventional wisdom.
Examples: Vehicle/train/ship control system, traffic signals system, traffic information control system, air traffic control system, surgery/operation equipment monitor, disaster/crime prevention system, etc.

The **Specific:** Applications as any failure, malfunction or error of the products might severe cause any damage to death, human bodily injury or other property (Products Safety Issue) and the safety of the public (Social Issues) and developed, designed and manufactured in accordance with the standards or quality assurance program designated by the customer who requires extremely high level reliability and quality.
Examples: Aerospace system (except seat entertainment monitor), nuclear control system, life support system, etc.

The quality grade of this product is the **"Standard"** unless otherwise specified in this document.

CONTENTS

1. OUTLINE

1.1 STRUCTURE AND PRINCIPLE

Color LCD module NL8048AC21-01F is composed of the amorphous silicon thin film transistor liquid crystal display (a-Si TFT LCD) panel structure with driver LSIs for driving the TFT (Thin Film Transistor) array and a backlight.

The a-Si TFT LCD panel structure is injected liquid crystal material into a narrow gap between the TFT array glass substrate and a color-filter glass substrate.

Color (Red, Green, Blue) data signals from a host system (e.g. signal generator, etc.) are modulated into best form for active matrix system by a signal processing board, and sent to the driver LSIs which drive the individual TFT arrays.

The TFT array as an electro-optical switch regulates the amount of transmitted light from the backlight assembly, when it is controlled by data signals. Color images are created by regulating the amount of transmitted light through the TFT array of red, green and blue dots.

1.2 APPLICATION

- For industrial use

1.3 FEATURES

- High luminance
- High contrast
- Wide viewing angle
- LVDS interface
- Reversible-scan direction
- LED backlight
- Built in LED driver

2. GENERAL SPECIFICATIONS

Display area	174.0 (H) × 104.4 (V) mm	
Diagonal size of display	20cm (8.0 inches)	
Drive system	a-Si TFT active matrix	
Display color	262,144 colors	
Pixel	800 (H) × 480 (V) pixels	
Pixel arrangement	RGB (Red dot, Green dot, Blue dot) vertical stripe	
Dot pitch	0.0725 (H) × 0.2175 (V) mm	
Pixel pitch	0.2175 (H) × 0.2175 (V) mm	
Module size	192.0 (H) × 122.0 (V) × 8.9(D) mm (typ.)	4
Weight	230 g (typ.)	4
Contrast ratio	800:1 (typ.)	
Viewing angle	*At the contrast ratio ≥10:1* • Horizontal: Right side 80° (typ.), Left side 80° (typ.) • Vertical: Up side 80° (typ.), Down side 80° (typ.)	
Designed viewing direction	*At DPS= Low or Open: Normal scan* • Viewing direction without image reversal: Up side (12 o'clock) • Viewing direction with contrast peak: Down side (6 o'clock) • Viewing angle with optimum grayscale (γ ≒ 2.2): Normal axis (perpendicular)	
Polarizer surface	Antiglare	
Polarizer pencil-hardness	3H (min.) [by JIS K5600]	
Color gamut	*At LCD panel center* 70 % (typ.) [against NTSC color space]	
Response time	*Ton+Toff (10%←→90%)* 8 ms (typ.)	4
Luminance	*At the maximum luminance control* 1000 cd/m^2 (typ.)	
Signal system	LVDS interface (1port) (Receiver: SN65LVDS86AQDGGR, Texas Instruments Inc. or equivalent) 6bit digital signals for data of RGB colors, Dot clock (CLK), Data enable (DE)	
Power supply voltage	LCD panel signal processing board: 3.3V LED driver: 12V	
Backlight	LED backlight built in LED driver	
Power consumption	*At the maximum luminance control, Checkered flag pattern* 5.9 W (typ.)	4.

3. BLOCK DIAGRAM

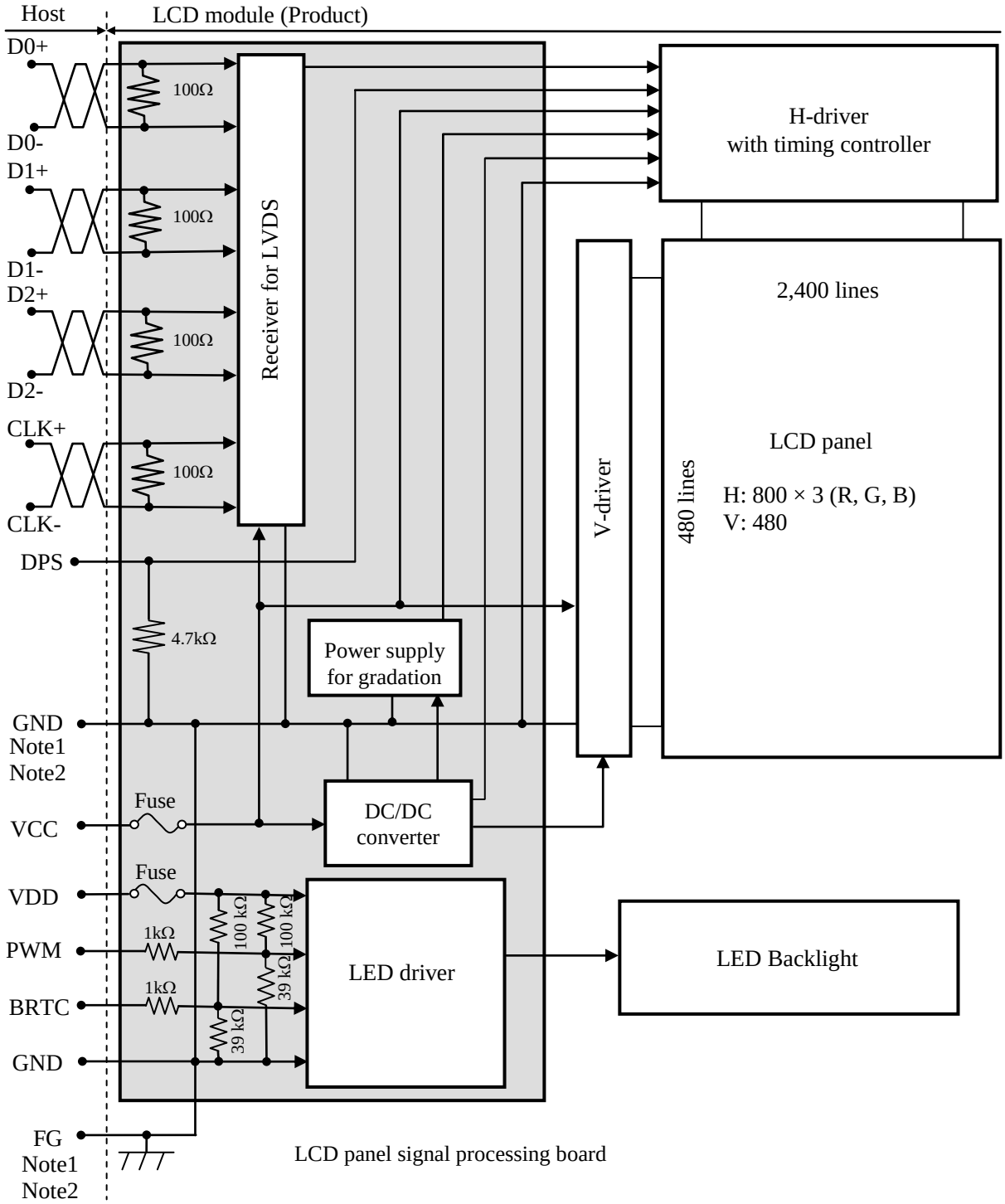

Note1: Relations between GND (Signal ground and LED driver ground) and FG (Frame ground) in the LCD module are as follows.

GND- FG	Connected

Note2: GND and FG must be connected to customer equipment's ground, and it is recommended that these grounds be connected together in customer equipment.

4. DETAILED SPECIFICATIONS

4.1 MECHANICAL SPECIFICATIONS

Parameter	Specification	Unit	
Module size	192.0 ± 0.5 (W) × 122.0 ± 0.5 (H) × 8.9 ± 0.5 (D) Note1	mm	4
Display area	174.0 (H) × 104.4 (V) Note1	mm	
Weight	230 (typ.), 250 (max.)	g	4

Note1: See "**8. OUTLINE DRAWINGS**".

4.2 ABSOLUTE MAXIMUM RATINGS

Parameter		Symbol	Rating	Unit	Remarks
Power supply voltage	LCD panel signal processing board	VCC	-0.3 to +3.96	V	Ta= 25°C
	LED driver	VDD	-0.3 to +15.0		
Input voltage for signals	Display signals Note1	VD	-0.3 to VCC+0.3	V	
	Function signals Note2	VF			
	Function signal for LED driver	PWM	-0.3 to +5.5	V	
		BRTC	-0.3 to VDD+1.0	V	
Storage temperature		Tst	-40 to +80	°C	-
Operating temperature	Front surface	TopF	-30 to +80	°C	Note3
	Rear surface	TopR	-30 to +80	°C	Note4
Relative humidity Note5		RH	≤ 95	%	Ta ≤ 40°C
			≤ 85	%	40 < Ta ≤ 50°C
			≤ 55	%	50 < Ta ≤ 60°C
			≤ 36	%	60 < Ta ≤ 70°C
			≤ 24	%	70 < Ta ≤ 80°C
Absolute humidity Note5		AH	≤ 70 Note6	g/m^3	Ta > 70°C

Note1: D0+/-, D1+/-, D2+/- and CLK+/-
Note2: DPS
Note3: Measured at LCD panel surface (including self-heat)
Note4: Measured at LCD module's rear shield surface (including self-heat)
Note5: No condensation
Note6: Water amount at Ta= 80°C and RH= 24%

4.3 ELECTRICAL CHARACTERISTICS

4.3.1 LCD panel signal processing board

(Ta= 25°C)

Parameter		Symbol	min.	typ.	max.	Unit	Remarks
Power supply voltage		VCC	3.0	3.3	3.6	V	-
Power supply current		ICC	-	195 Note1	290 Note2	mA	at VCC= 3.3V
Permissible ripple voltage		VRPC	-	-	100	mVp-p	for VCC
Differential input threshold voltage	High	VTH	-	-	+100	mV	at VCM= 1.2 V Note3
	Low	VTL	-100	-	-	mV	
Terminating resistance		RT	-	100	-	Ω	-
Input voltage for DPS signals	High	VFH	0.7VCC	-	VCC	V	CMOS level
	Low	VFL	0	-	0.3VCC	V	
Input current for DPS signal	High	IFH	-	-	-300	μA	-
	Low	IFL	-300	-	-	μA	

Note1: Checkered flag pattern [by EIAJ ED-2522]
Note2: Pattern for maximum current
Note3: Common mode voltage for LVDS receiver

4.3.2 LED driver

(Ta= 25°C)

Parameter		Symbol	min.	typ.	max.	Unit	Remarks
Power supply voltage		VDD	10.8	12.0	13.2	V	Note1
Power supply current Note2		IDD	-	435	480 Note3	mA	Note4
Permissible ripple voltage		VRPD	-	-	200	mVp-p	for VDD
Input voltage for PWM signal	High	VDFH1	2.0	-	5.3	V	-
	Low	VDFL1	-	-	0.8	V	
Input voltage for BRTC signal	High	VDFH2	2.0	-	VDD	V	-
	Low	VDFL2	-	-	0.8	V	
PWM frequency		f_{PWM}	100	-	10k	Hz	Note5, Note6
PWM duty cycle		DR_{PWM}	1	-	100	%	Note7
PWM pulse width		tPWH	1	-	-	μs	

Note1: When designing of the power supply, take the measures for the prevention of surge voltage.
Note2: The power supply lines (VDD and GND) may have ripple voltage during luminance control of LED. There is the possibility that the ripple voltage produces acoustic noise and signal wave noise in audio circuit and so on. Put a capacitor between the power supply lines (VDD and GND) to reduce the noise if necessary.
Note3: This value excludes peak current such as overshoot current.

Note4: At the maximum luminance control.
Note5: A recommended f_{PWM} value is as follows.

$$f_{PWM} = \frac{2n-1}{4} \times fv$$

$$(n = \text{integer},\ fv = \text{frame frequency of LCD module})$$

Note6: Depending on the frequency used, a noise may appear on the screen, please conduct a thorough evaluation.
Note7: While the BRTC signal is high, do not set the tPWH (PWM pulse width) is less than 1μs. It may cause abnormal working of the backlight. In this case, turn the backlight off and then on again by BRTC signal. 4

4.3.3 Power supply voltage ripple

This product works if the ripple voltage levels are over the permissible values as the following table, but there might be noise on the display image.

Power supply voltage		Ripple voltage Note1 (Measure at input terminal of power supply)	Unit
VCC	3.3V	≤ 100	mVp-p
VDD	12.0V	≤ 200	mVp-p

Note1: The permissible ripple voltage includes spike noise.

4.3.4 Fuse

Parameter	Fuse		Rating	Fusing current	Remarks
	Type	Supplier			
VCC	FCC16152AB	KAMAYA ELECTRIC CO.,LTD	1.5A 36V	3.0A	Note1
VDD	FCC16152AB	KAMAYA ELECTRIC CO.,LTD	1.5A 36V	3.0A	

Note1: The power supply's rated current must be more than the fusing current. If it is less than the fusing current, the fuse may not blow in a short time, and then nasty smell, smoke and so on may occur.

4.4 POWER SUPPLY VOLTAGE SEQUENCE

4.4.1 LCD panel signal processing board

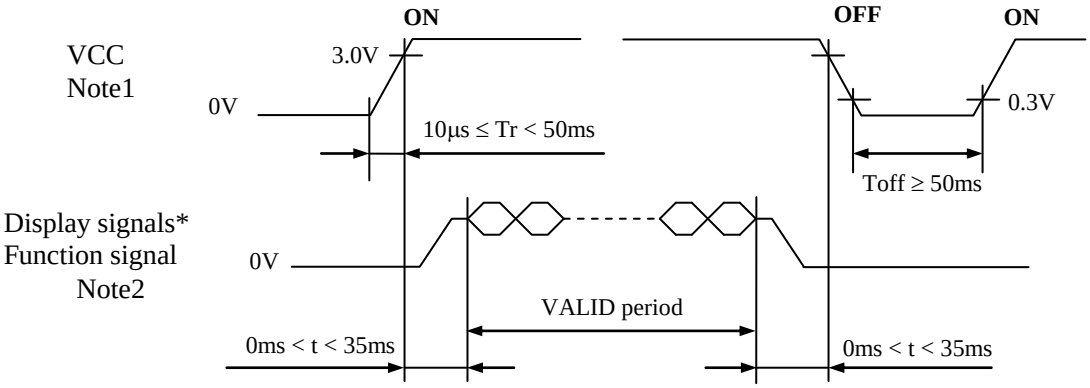

4

* These signals should be measured at the terminal of 100Ω resistance.

Note1: If there is a voltage variation (voltage drop) at the rising edge of VCC below 3.0V, there is a possibility that a product does not work due to a protection circuit.

Note2: Display signals (D0+/-, D1+/-, D2+/- and CLK+/-) and function signal (DPS) must be set to Low or High-impedance, except the VALID period (See above sequence diagram), in order to avoid the circuitry damage.
If some of display and function signals of this product are cut while this product is working, even if the signal input to it once again, it might not work normally. If a customer stops the display and function signals, VCC also must be shut down.

4.4.2 LED driver

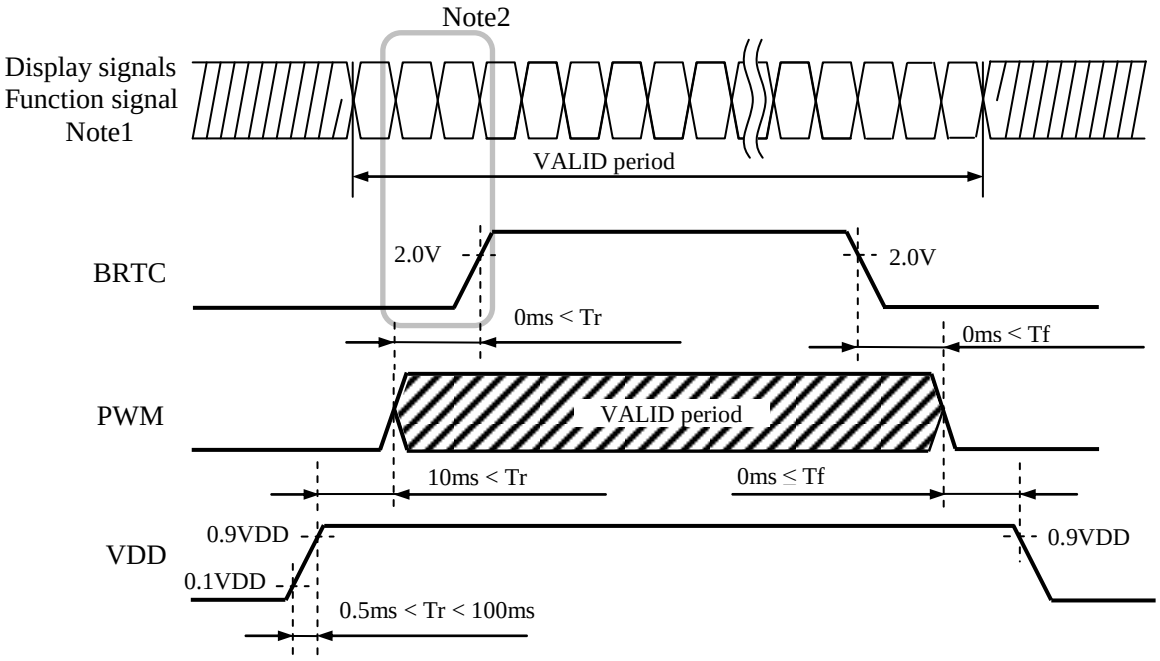

4

Note1: These are the display and function signals for LCD panel signal processing board.

Note2: The backlight should be turned on within the valid period of display and function signals, in order to avoid unstable data display.

4.5 CONNECTIONS AND FUNCTIONS FOR INTERFACE PINS

4.5.1 LCD panel signal processing board

CN1 socket (LCD module side): FI-SE20P-HFE (Japan Aviation Electronics Industry Limited (JAE))
Adaptable plug: FI-S20S (Japan Aviation Electronics Industry Limited (JAE))

Pin No.	Symbol	Signal	Remarks
1	GND	Ground	Note4
2	GND		
3	DPS	Selection of scan direction	High: Reverse scan Low or Open: Normal scan Note2
4	N. C.	-	Keep this pin Open.
5	GND	Ground	Note4
6	CLK+	Pixel clock	Note3
7	CLK-		
8	GND	Ground	Note4
9	D2+	Pixel data (B2-B5,DE)	Note1, Note3
10	D2-		
11	GND	Ground	Note4
12	D1+	Pixel data (G1-G5,B0-B1)	Note1, Note3
13	D1-		
14	GND	Ground	Note4
15	D0+	Pixel data (R0-R5,G0)	Note1, Note3
16	D0-		
17	GND	Ground	Note4
18	GND		
19	VCC	Power supply	Note4
20	VCC		

Note1: See "**4.6 DISPLAY COLORS AND INPUT DATA SIGNALS**".
Note2: See "**4.8 SCANNING DIRECTIONS**".
Note3: Twist pair wires with 100Ω (Characteristic impedance) should be used between LCD panel signal processing board and LVDS transmitter.
Note4: All GND and VCC terminals should be used without any non-connected lines.

4.5.2 LED driver

CN2 socket (LCD module side): FI-S6P-HFE (Japan Aviation Electronics Industry Limited (JAE))
Adaptable plug: FI-S6S (Japan Aviation Electronics Industry Limited (JAE))

Pin No.	Symbol	Function	Remarks
1	VDD	Power supply	Note1
2	VDD	Power supply	
3	GND	Ground	
4	GND	Ground	
5	BRTC	Backlight ON/OFF control	High or Open: Backlight ON Low: Backlight OFF
6	PWM	Luminance control terminal by PWM Dimming	High or Open: 100% (Max. Luminance)

Note1: All GND and VDD terminals must be connected to appropriate terminals.

4.5.3 Positions of plug and socket

Rear side

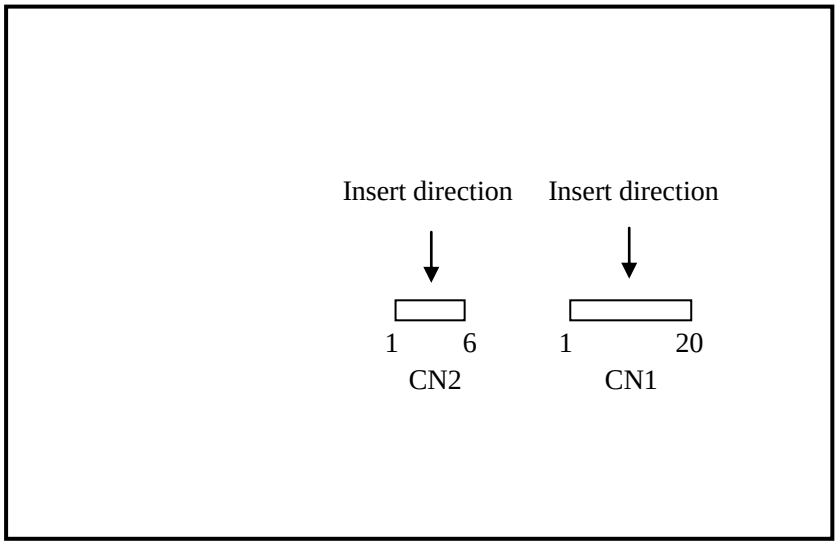

4.5.4 Connection between receiver and transmitter for LVDS

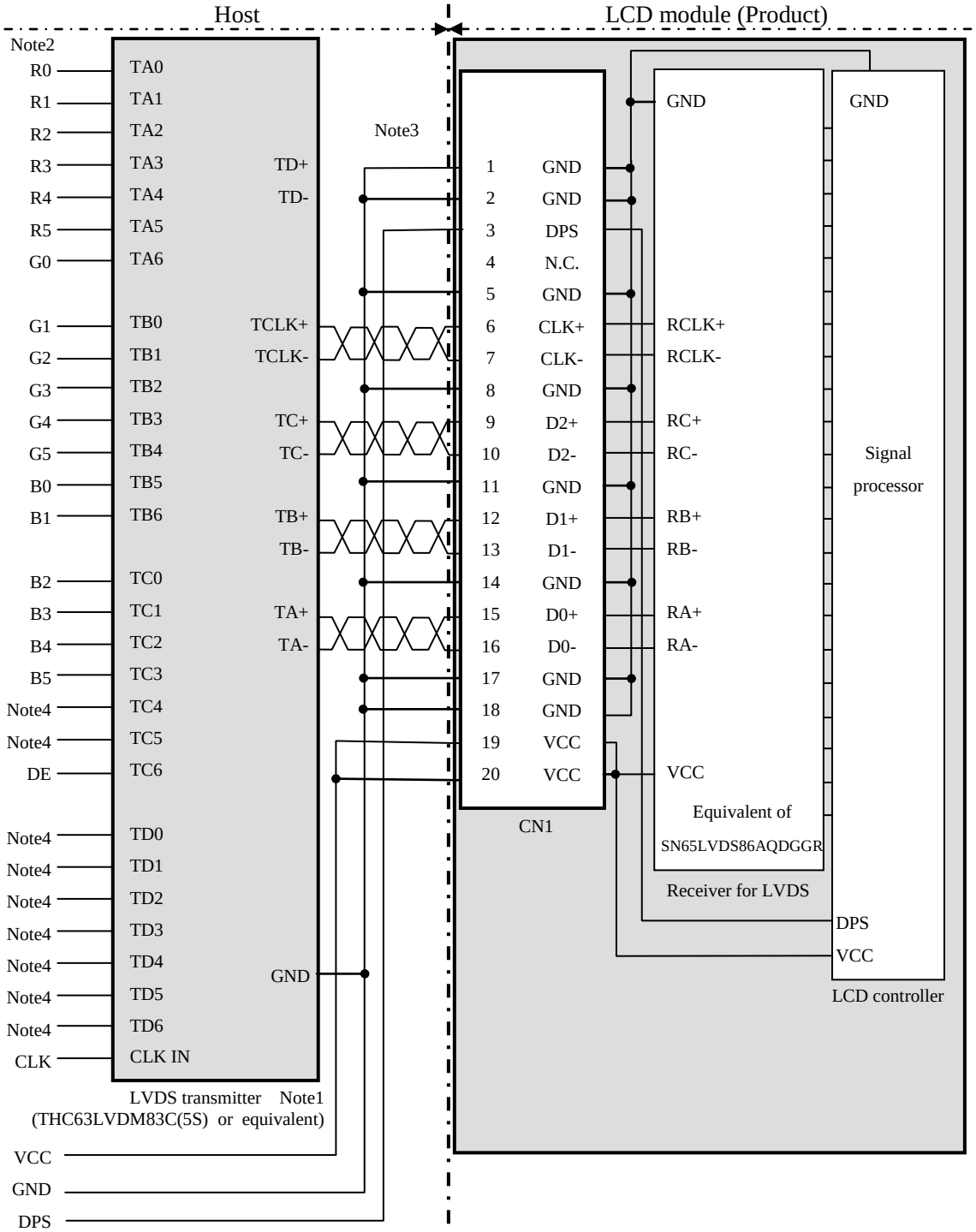

Note1: Recommended transmitter: THC63LVDM83C(5S) (THine Electronics Inc.) or equivalent

Note2: LSB (Least Significant Bit) – R0, G0, B0 MSB (Most Significant Bit) – R5, G5, B5

Note3: Twist pair wires with 100Ω (Characteristic impedance) should be used between LCD panel signal processing board and LVDS transmitter.

Note4: Input signals to TC4, TC5 and TD0-6 are not used inside the product, but do not keep them open to avoid noise problem.

4.5.5 Input data mapping

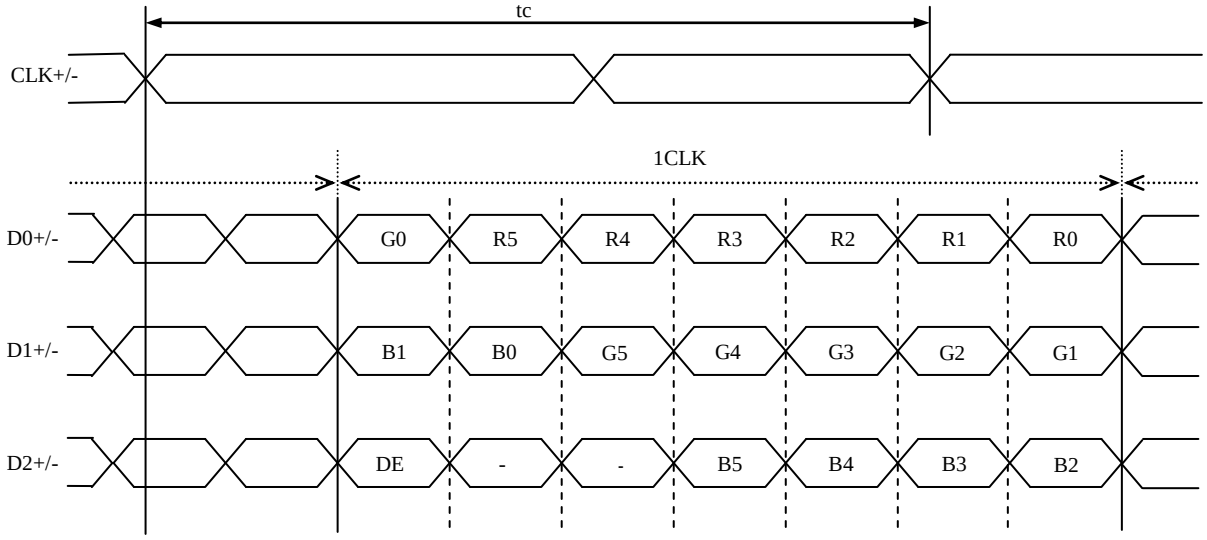

4.6 DISPLAY COLORS AND INPUT DATA SIGNALS

This product can display in equivalent to 262,144 colors in 64 gray scales by combination between input data signals. See following table.

Display colors		Data signal (0: Low level, 1: High level)																	
		R5	R4	R3	R2	R1	R0	G5	G4	G3	G2	G1	G0	B5	B4	B3	B2	B1	B0
Basic colors	Black	0	0	0	0	0	0	0	0	0	0	0	0	0	0	0	0	0	0
	Blue	0	0	0	0	0	0	0	0	0	0	0	0	1	1	1	1	1	1
	Red	1	1	1	1	1	1	0	0	0	0	0	0	0	0	0	0	0	0
	Magenta	1	1	1	1	1	1	0	0	0	0	0	0	1	1	1	1	1	1
	Green	0	0	0	0	0	0	1	1	1	1	1	1	0	0	0	0	0	0
	Cyan	0	0	0	0	0	0	1	1	1	1	1	1	1	1	1	1	1	1
	Yellow	1	1	1	1	1	1	1	1	1	1	1	1	0	0	0	0	0	0
	White	1	1	1	1	1	1	1	1	1	1	1	1	1	1	1	1	1	1
Red gray scale	Black	0	0	0	0	0	0	0	0	0	0	0	0	0	0	0	0	0	0
		0	0	0	0	0	1	0	0	0	0	0	0	0	0	0	0	0	0
	dark	0	0	0	0	1	0	0	0	0	0	0	0	0	0	0	0	0	0
	↑				:						:						:		
	↓				:						:						:		
	bright	1	1	1	1	0	1	0	0	0	0	0	0	0	0	0	0	0	0
		1	1	1	1	1	0	0	0	0	0	0	0	0	0	0	0	0	0
	Red	1	1	1	1	1	1	0	0	0	0	0	0	0	0	0	0	0	0
Green gray scale	Black	0	0	0	0	0	0	0	0	0	0	0	0	0	0	0	0	0	0
		0	0	0	0	0	0	0	0	0	0	0	1	0	0	0	0	0	0
	dark	0	0	0	0	0	0	0	0	0	0	1	0	0	0	0	0	0	0
	↑				:						:						:		
	↓				:						:						:		
	bright	0	0	0	0	0	0	1	1	1	1	0	1	0	0	0	0	0	0
		0	0	0	0	0	0	1	1	1	1	1	0	0	0	0	0	0	0
	Green	0	0	0	0	0	0	1	1	1	1	1	1	0	0	0	0	0	0
Blue gray scale	Black	0	0	0	0	0	0	0	0	0	0	0	0	0	0	0	0	0	0
		0	0	0	0	0	0	0	0	0	0	0	0	0	0	0	0	0	1
	dark	0	0	0	0	0	0	0	0	0	0	0	0	0	0	0	0	1	0
	↑				:						:						:		
	↓				:						:						:		
	bright	0	0	0	0	0	0	0	0	0	0	0	0	1	1	1	1	0	1
		0	0	0	0	0	0	0	0	0	0	0	0	1	1	1	1	1	0
	Blue	0	0	0	0	0	0	0	0	0	0	0	0	1	1	1	1	1	1

4.7 DISPLAY POSITIONS

The following table is the coordinates per pixel (See **"4.8 SCANNING DIRECTIONS"**.).

C (0, 0)

R	G	B

C(0, 0)	C(1, 0)	· · ·	C(X, 0)	· · ·	C(798, 0)	C(799, 0)
C(0, 1)	C(1, 1)	· · ·	C(X, 1)	· · ·	C(798, 1)	C(799, 1)
· · ·	· · ·	· · · · ·	· · ·	· · · · ·	· · ·	· · · · ·
C(0, Y)	C(1, Y)	· · ·	C(X, Y)	· · ·	C(798, Y)	C(799, Y)
· · ·	· · ·	· · · · ·	· · ·	· · · · ·	· · ·	· · ·
C(0, 478)	C(1, 478)	· · ·	C(X, 478)	· · ·	C(798, 478)	C(799, 478)
C(0, 479)	C(1, 479)	· · ·	C(X, 479)	· · ·	C(798, 479)	C(799, 479)

4.8 SCANNING DIRECTIONS

The following figures are seen from a front view.

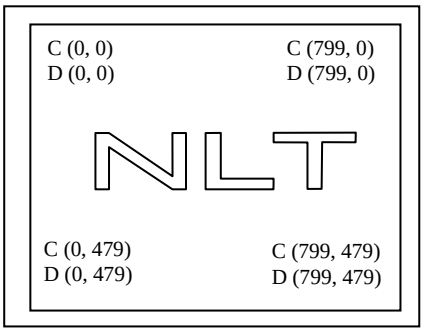

Note1

Figure1. Normal scan (DPS: Low or Open)

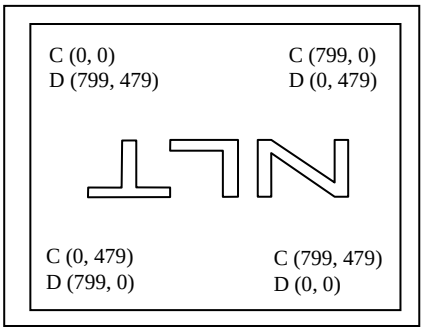

Note1

Figure2. Reverse scan (DPS: High)

Note1: Meaning of C (X, Y) and D (X, Y)
C (X, Y): The coordinates of the display position (See "**4.7 DISPLAY POSITIONS**".)
D (X, Y): The data number of input signal for LCD panel signal processing board

4.9 INPUT SIGNAL TIMINGS

4.9.1 Outline of input signal timings

- Horizontal signal

Note1

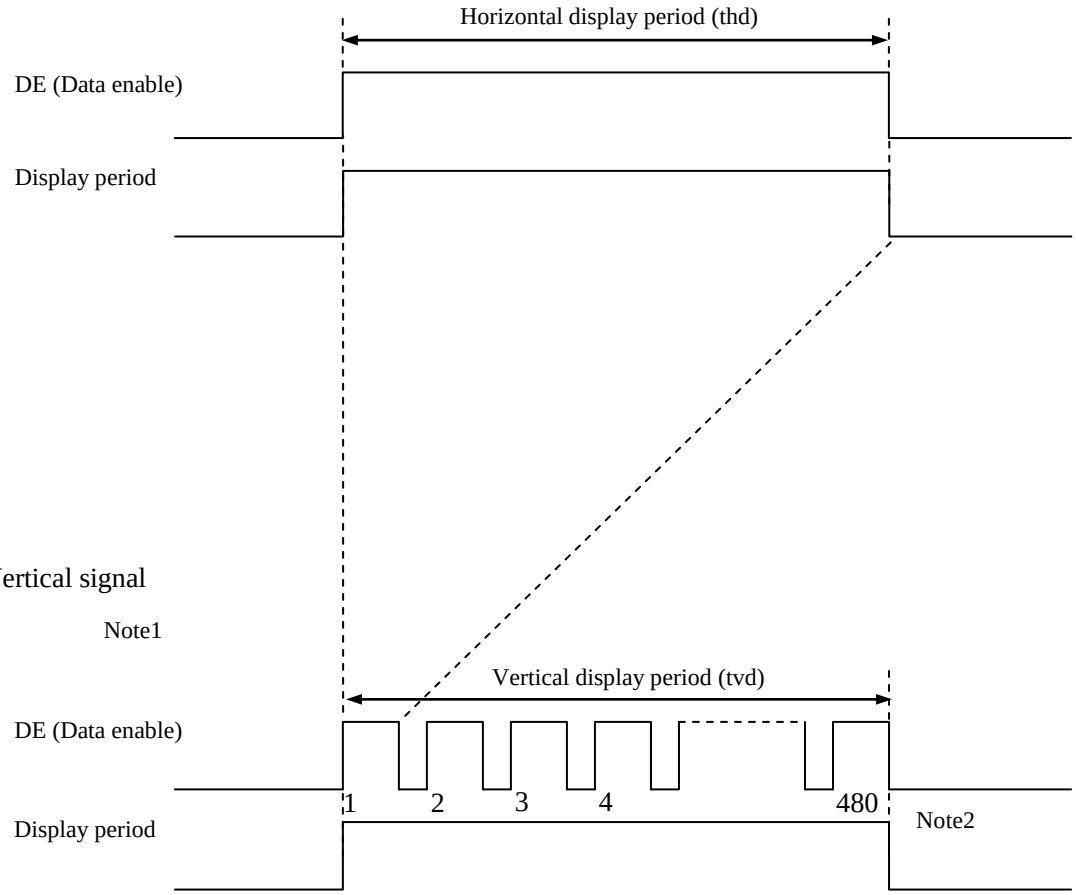

- Vertical signal

Note1

Note1: This diagram indicates virtual signal for set up to timing.
Note2: See "**4.9.3 Input signal timing chart**" for the pulse number.

4.9.2 Timing characteristics

(Note1, Note2, Note3)

Parameter			Symbol	min.	typ.	max.	Unit	Remarks
CLK	Frequency		1/tc	28.0	32.256	36.0	MHz	31.002 ns (typ.)
	Duty		-	-			-	-
	Rise time, Fall time		-				ns	
DATA	CLK-DATA	Setup time	-	-			ns	-
		Hold time	-				ns	
	Rise time, Fall time		-				ns	
DE	Horizontal	Cycle	th	28.44	31.746	36.57	μs	31.5 kHz (typ.)
				-	1,024	-	CLK	
		Display period	thd	800			CLK	-
	Vertical (One frame)	Cycle	tv	14.931	16.667	19.19	ms	60.0 Hz (typ.)
				-	525	-	H	
		Display period	tvd	480			H	
	CLK-DE	Setup time	-	-			ns	-
		Hold time	-				ns	
	Rise time, Fall time		-				ns	

Note1: Definition of parameters is as follows.
tc= 1CLK, th= 1H
Note2: See the data sheet of LVDS transmitter.
Note3: Vertical cycle (tv) should be specified in integral multiple of Horizontal cycle (th).

4.9.3 Input signal timing chart

Horizontal timing

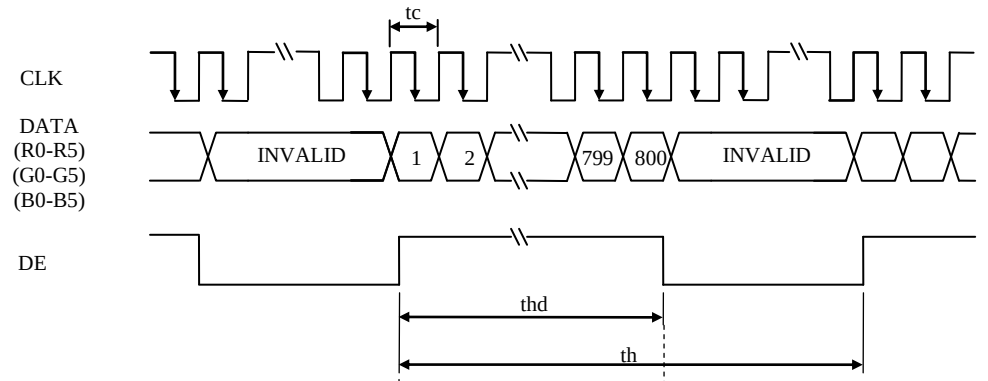

Vertical timing

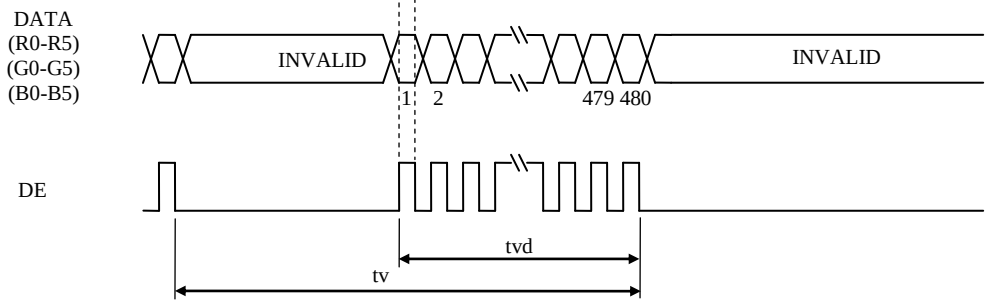

4.10 OPTICS

4.10.1 Optical characteristics

(Note1, Note2)

Parameter		Condition	Symbol	min.	typ.	max.	Unit	Measuring instrument	Remarks
Luminance		White at center θR= 0°, θL= 0°, θU= 0°, θD= 0°	L	600	1000	-	cd/m^2	BM-5A	-
Contrast ratio		White/Black at center θR= 0°, θL= 0°, θU= 0°, θD= 0°	CR	500	800	-	-	BM-5A	Note3
Luminance uniformity		White θR= 0°, θL= 0°, θU= 0°, θD= 0°	LU	-	1.25	1.4	-	BM-5A	Note4
Chromaticity	White	**x** coordinate	Wx	0.263	0.313	0.363	-	SR-3	Note5
		y coordinate	Wy	0.279	0.329	0.379	-		
	Red	**x** coordinate	Rx	-	0.613	-	-		
		y coordinate	Ry	-	0.347	-	-		
	Green	**x** coordinate	Gx	-	0.316	-	-		
		y coordinate	Gy	-	0.609	-	-		
	Blue	**x** coordinate	Bx	-	0.151	-	-		
		y coordinate	By	-	0.087	-	-		
Color gamut		θR= 0°, θL= 0°, θU= 0°, θD= 0° at center, against NTSC color space	C	65	70	-	%		
Response time		White to Black	Ton	-	3	5	ms	BM-5A -10000	Note6 Note7
		Black to White	Toff	-	5	8	ms		
Viewing angle	Right	θU= 0°, θD= 0°, CR≥ 10	θR	70	80	-	°	EZ Contrast	Note8
	Left	θU= 0°, θD= 0°, CR≥ 10	θL	70	80	-	°		
	Up	θR= 0°, θL= 0°, CR≥ 10	θU	70	80	-	°		
	Down	θR= 0°, θL= 0°, CR≥ 10	θD	70	80	-	°		

Note1: These are initial characteristics.
Note2: Measurement conditions are as follows.
Ta = 25°C, VCC = 3.3V, VDD = 12.0V, PWM duty ratio: 100%,
Display mode: WVGA, Horizontal cycle = 1/31.5kHz, Vertical cycle = 1/60.0Hz,
DPS= Low or Open: Normal scan

Optical characteristics are measured at luminance saturation 20minutes after the product works in the dark room. Also measurement methods are as follows.

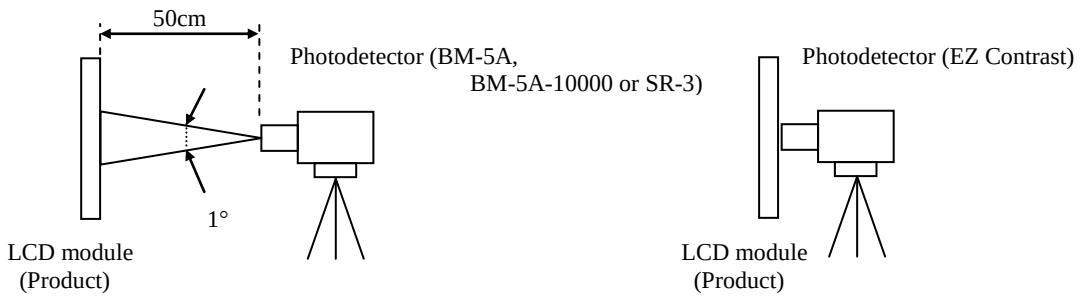

Note3: See "**4.10.2 Definition of contrast ratio**".
Note4: See "**4.10.3 Definition of luminance uniformity**".
Note5: These coordinates are found on CIE 1931 chromaticity diagram.
Note6: Product surface temperature: TopF= 34°C
Note7: See "**4.10.4 Definition of response times**".
Note8: See "**4.10.5 Definition of viewing angles**".

4.10.2 Definition of contrast ratio

The contrast ratio is calculated by using the following formula.

$$\text{Contrast ratio (CR)} = \frac{\text{Luminance of white screen}}{\text{Luminance of black screen}}$$

4.10.3 Definition of luminance uniformity

The luminance uniformity is calculated by using following formula.

$$\text{Luminance uniformity (LU)} = \frac{\text{Maximum luminance from ① to ⑤}}{\text{Minimum luminance from ① to ⑤}}$$

The luminance is measured at near the 5 points shown below.

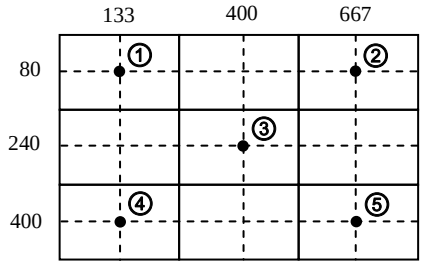

4.10.4 Definition of response times

Response time is measured at the time when the luminance changes from " white " to " black ", or " black " to " white " on the same screen point, by photo-detector. Ton is the time when the luminance changes from 90% down to 10%. Also Toff is the time when the luminance changes from 10% up to 90% (See the following diagram.).

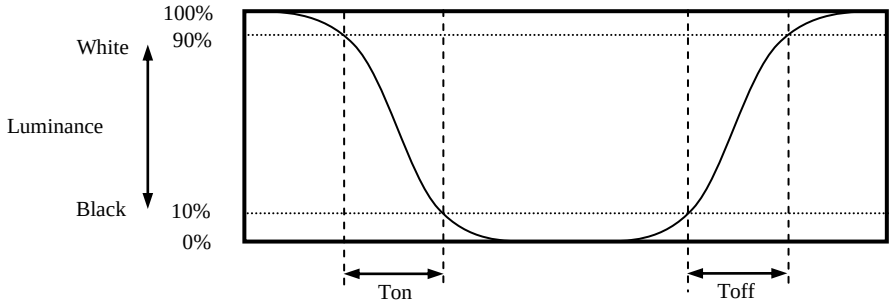

4.10.5 Definition of viewing angles

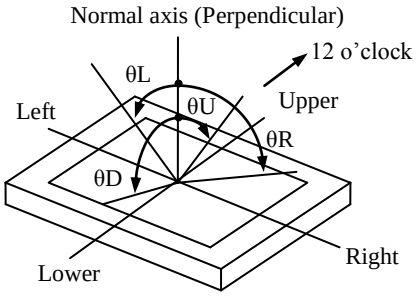

5. ESTIMATED LUMINANCE LIFETIME

The luminance lifetime is the time from initial luminance to half-luminance.

This lifetime is the estimated value, and is not guarantee value.

Condition		Estimated luminance lifetime (Life time expectancy) Note1, Note2, Note3	Unit
LED elementary substance	25°C (Ambient temperature of the product) Continuous operation, PWM duty ratio: 100%	100,000	h
	80°C (Temperature at LCD panel surface and rear shield surface) Continuous operation, PWM duty ratio: 100%	70,000	

4

Note1: Life time expectancy is mean time to half-luminance.
Note2: Estimated luminance lifetime is not the value for LCD module but the value for LED elementary substance.
Note3: By ambient temperature, the lifetime changes particularly. Especially, in case the product works under high temperature environment, the lifetime becomes short.

6. RELIABILITY TESTS

Test item	Condition	Judgment Note1
High temperature and humidity (Operation)	① 60 ± 2°C, RH= 90%, 240hours ② Display data is black.	No display malfunctions
High temperature (Operation)	① 80 ± 3°C, 240hours ② Display data is black.	
Heat cycle (Operation)	① -30 ± 3°C…1hour 80 ± 3°C…1hour ② 50cycles, 4 hours/cycle ③ Display data is black.	
Thermal shock (Non operation)	① -40 ± 3°C…30minutes 80 ± 3°C…30minutes ② 100cycles, 1hour/cycle ③ Temperature transition time is within 5 minutes.	
ESD (Operation)	Contact Discharge ① 150pF, 150Ω, ±10kV ② 9 places on a panel surface Note2 ③ 10 times each places at 1 sec interval	
Dust (Operation)	① Sample dust: No. 15 (by JIS-Z8901) ② 15 seconds stir ③ 8 times repeat at 1 hour interval	
Vibration (Non operation)	① 5 to 100Hz, 19.6m/s^2 ② 1 minute/cycle ③ X, Y, Z directions ④ 120 times each directions	No display malfunctions No physical damages
Mechanical shock (Non operation)	① 539m/s^2, 11ms ② ±X, ±Y, ±Z directions ③ 5 times each directions	

Note1: Display and appearance are checked under environmental conditions equivalent to the inspection conditions of defect criteria.
Note2: See the following figure for discharge points.

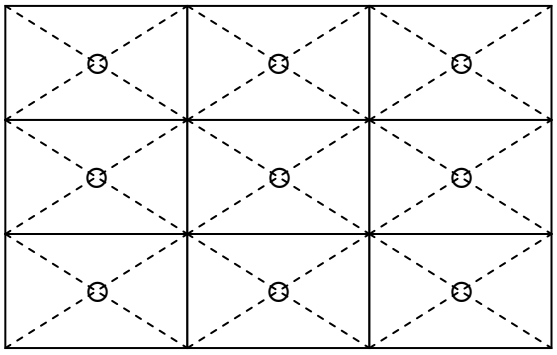

7. PRECAUTIONS

7.1 MEANING OF CAUTION SIGNS

The following caution signs have very important meaning. **Be sure to read "7.2 CAUTIONS" and "7.3 ATTENTIONS"!**

⚠	This sign has the meaning that a customer will be injured or the product will sustain damage if the customer practices wrong operations.

✋	This sign has the meaning that a customer will be injured if the customer practices wrong operations.

7.2 CAUTIONS

✋

- **Do not shock and press the LCD panel and the backlight! There is a danger of breaking, because they are made of glass. (Shock: Equal to or no greater than 539m/s^2 and equal to or no greater than 11ms, Pressure: Equal to or no greater than 19.6 N (ϕ16mm jig))**

7.3 ATTENTIONS ⚠

7.3.1 Handling of the product

① Take hold of both ends without touching the circuit board when the product (LCD module) is picked up from inner packing box to avoid broken down or misadjustment, because of stress to mounting parts on the circuit board.
② When the product is put on the table temporarily, display surface must be placed downward.
③ When handling the product, take the measures of electrostatic discharge with such as earth band, ionic shower and so on, because the product may be damaged by electrostatic.
④ The torque for product mounting screws must never exceed 0.230 N·m. Higher torque might result in distortion of the bezel. And the length of product mounting screws must be ≤ 4.0 mm.
⑤ The product must be installed using mounting holes without undue stress such as bends or twist (See outline drawings). And do not add undue stress to any portion (such as bezel flat area). Bends or twist described above and undue stress to any portion may cause display mura.
⑥ Do not press or rub on the sensitive product surface. When cleaning the panel surface, wipe it with a soft dry cloth.
⑦ Do not push or pull the interface connectors while the product is working.
⑧ When handling the product, use of an original protection sheet on the product surface (polarizer) is recommended for protection of product surface. Adhesive type protection sheet may change color or characteristics of the polarizer.
⑨ Usually liquid crystals don't leak through the breakage of glasses because of the surface tension of thin layer and the construction of LCD panel. But, if you contact with liquid crystal by any chance, please wash it away with soap and water.

7.3.2 Environment

① Do not operate or store in high temperature, high humidity, dewdrop atmosphere or corrosive gases. Keep the product in packing box with antistatic pouch in room temperature to avoid dusts and sunlight, when storing the product.
② In order to prevent dew condensation occurred by temperature difference, the product packing box must be opened after enough time being left under the environment of an unpacking room. Evaluate the storage time sufficiently because dew condensation is affected by the environmental temperature and humidity. (Recommended leaving time: 6 hours or more with the original packing state after a customer receives the package)
③ Do not operate in high magnetic field. If not, circuit boards may be broken.
④ This product is not designed as radiation hardened.

7.3.3 Characteristics

The following items are neither defects nor failures.

① Characteristics of the LCD (such as response time, luminance, color uniformity and so on) may be changed depending on ambient temperature. If the product is stored under condition of low temperature for a long time, it may cause display mura. In this case, the product should be operated after enough time being left under condition of operating temperature.
② Display mura, flickering, vertical streams or tiny spots may be observed depending on display patterns.
③ Do not display the fixed pattern for a long time because it may cause image sticking. Use a screen saver, if the fixed pattern is displayed on the screen.
④ The display color may be changed depending on viewing angle because of the use of condenser sheet in the backlight.
⑤ Optical characteristics may be changed depending on input signal timings.

7.3.4 Others

① All GND, VCC and VDD terminals should be used without any non-connected lines.
② Do not disassemble a product or adjust variable resistors.
③ Pack the product with the original shipping package, in order to avoid any damages during transportation, when returning the product to NLT.

8. OUTLINE DRAWINGS

8.1 FRONT VIEW

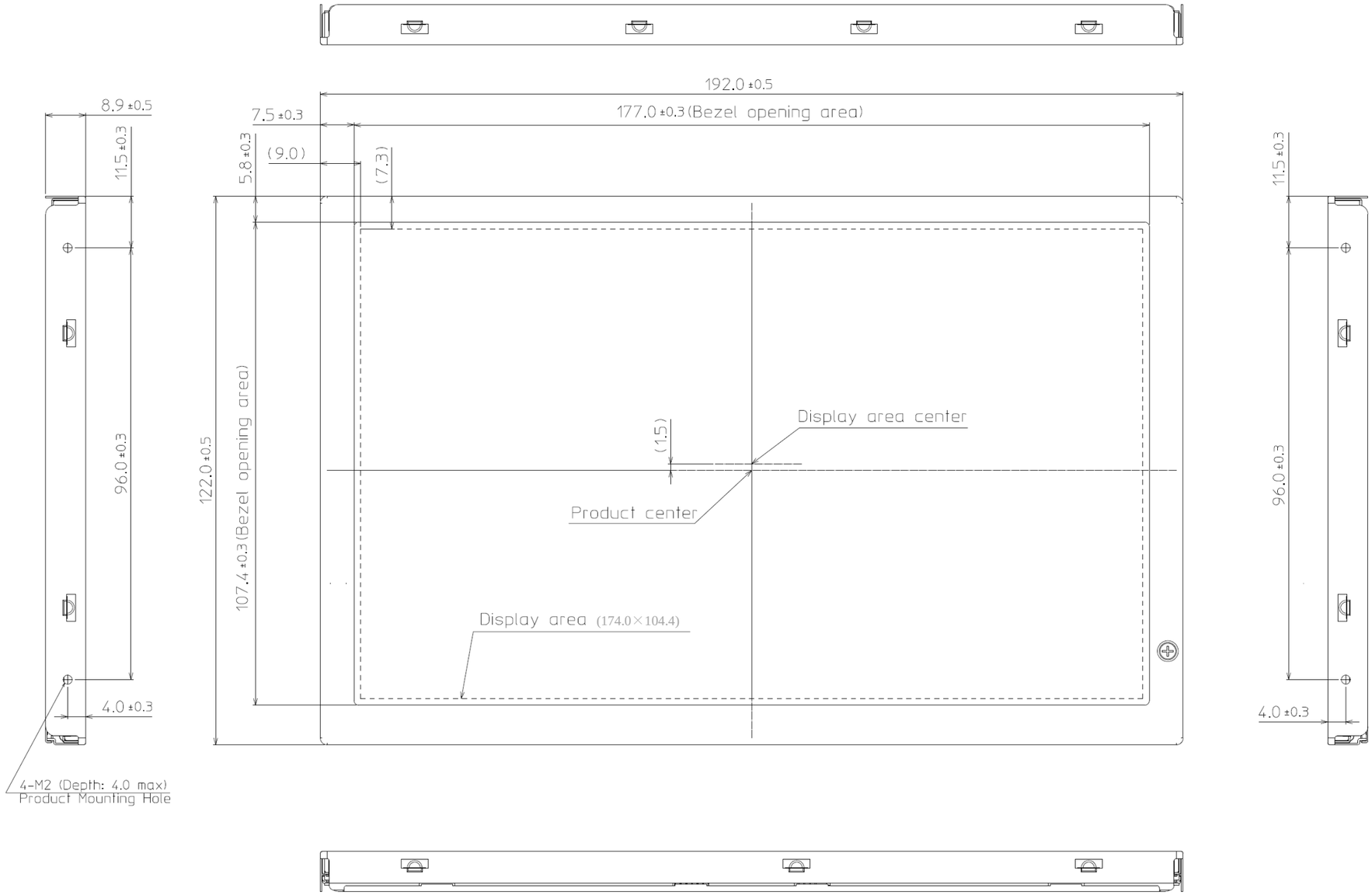

Note1: The values in parentheses are for reference.
Note2: The torque for product mounting screws must never exceed 0.230 N·m. And the length of mounting screws from surface of plate must be ≤ 4.0 mm.
Note3: Labels and tapes are not included in the module outline.

Unit: mm

8.2 REAR VIEW

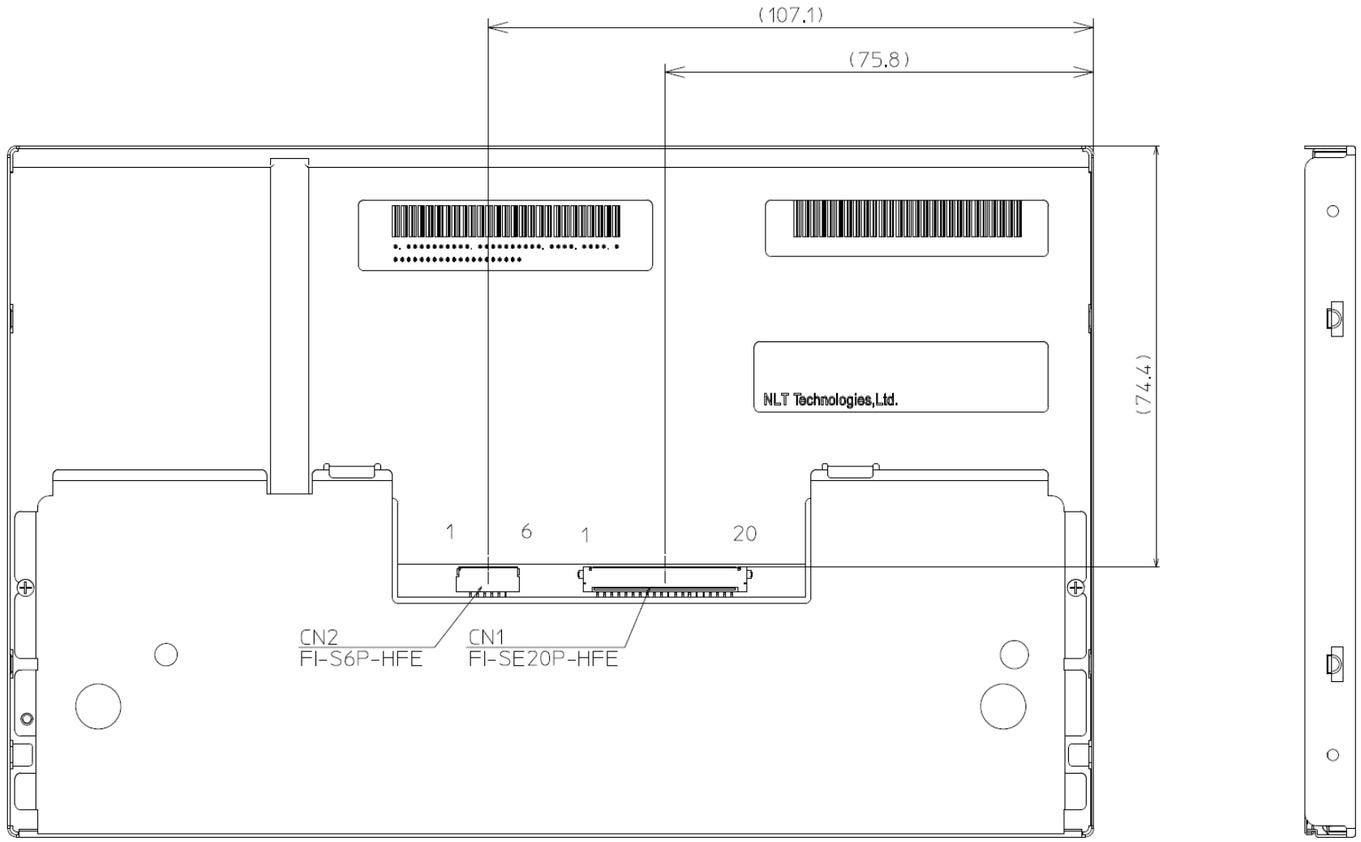

Note1: The values in parentheses are for reference.
Note2: The torque for product mounting screws must never exceed 0.230 N·m. And the length of mounting screws from surface of plate must be ≤ 4.0 mm.
Note3: Labels and tapes are not included in the module outline.

Unit: mm

REVISION HISTORY

The inside of latest specifications is revised to the clerical error and the major improvement of previous edition. Only a changed part such as functions, characteristic value and so on that may affect a design of customers, are described especially below.

Edition	Document number	Prepared date	Revision contents and signature
1st edition	DOD-PP-1692	June 17, 2013	**Revision contents** New issue **Writer** *Approved by* R. KAWASHIMA *Checked by* ——— *Prepared by* A. KUMANO
2nd edition	DOD-PP-1765	Sep. 30, 2013	**Revision contents** P5 General specifications • Contrast ratio: (600):1 (typ.) → (800):1 (typ.) P6 Block diagram • VDD- BRTC: TBD kΩ → 10 kΩ • VDD- PWM: TBD kΩ → 10 kΩ P9 Fuse (Specified) P19 Optics- Optical characteristics • Contrast ratio: (400) (min.) (600) (typ.) → (500) (min.) (800) (typ.) P23 Precautions- Attentions • Handling of the product- ④: ≤ 2.0 mm → ≤ 4.0 mm P25 Outline drawing - Front view (Updated) • Note2: ≤ 2.0 mm → ≤ 4.0 mm P26 Outline drawing - Rear view (Specified) • Note2: ≤ 2.0 mm → ≤ 4.0 mm **Writer** *Approved by* R. KAWASHIMA *Checked by* ——— *Prepared by* A. KUMANO
3rd edition	DOD-PP-1858	Feb. 27, 2014	**Revision contents** P5 General specifications • Weight: TBD g (typ.) → (230) g (typ.) • Contrast ratio: (800):1 (typ.) → 800:1 (typ.) • Response time: (25) ms (typ.) → (18) ms (typ.) • Signal system - Receiver: TBD → SN65LVDS86AQDGGR, Texas Instruments Inc. or equivalent • Power consumption: TBD W (typ.) → (6.0) W (typ.) P6 Block diagram • PWM- LED driver: 1kΩ (addition) • BRTC- LED driver: 1kΩ (addition) • VDD-BRTC: 10kΩ → 100kΩ • VDD-PWM: 10kΩ → 100kΩ • BRTC- GND: 39kΩ (addition) • PWM- GND: 39kΩ (addition) P7 Mechanical specifications • Weight: TBD g (typ., max.) → (230) g (typ.), (250) g (max.) P7 Absolute maximum ratings • Power supply voltage - VCC: -0.3 to +(4.0) V → -0.3 to +3.96 V - VDD: -0.3 to +(15) V → -0.3 to +15.0 V • Input voltage for signals - Function signal for LED driver - PWM: -0.3 to +(15) V → -0.3 to +5.5 V - BRTC: -0.3 to +(15) V → -0.3 to +VDD+1.0 V • Storage temperature: -30 to +80 °C → -40 to +80 °C • Note6 (addition)

REVISION HISTORY

Edition	Document number	Prepared date	Revision contents and signature
3rd edition	DOD-PP-1858	Feb. 27, 2014	**Revision contents** P8 LCD panel signal processing board • Power supply current: TBD (typ., max.) mA → (235) (typ.), (330) (max.) mA • Input current for DPS signal - High: (-300) (max.) μA →-300 (max.) μA - Low: (-300) (min.) μA →-300 (min.) μA P8, 9 LED driver • Power supply current: TBD (typ., max.) mA → (435) (typ.), (480) (max.) mA • Input voltage for PWM signal - VDFH1: (2.1) V (min.), VDD (max.) → 2.0 V (min.), 5.3V (max.) - VDFL1: (0.8) V (max.) → 0.8 V (max.) • Input voltage for BRTC signal - VDFH2: (2.1) V (min.) → 2.0 V (min.) - VDFL2: (0.8) V (max.) → 0.8 V (max.) • PWM frequency: (1k) Hz (max.) → 10k Hz (max.) • PWM pulse width: TBD μs (min.) → (1) μs (min.) • Note7: TBDμs → (1) μs P10 LED driver • BRTC: (2.1) → 2.0V (2points) P13 Connection between receiver and transmitter for LVDS • Receiver for LVDS: TBD → SN65LVDS86AQDGGR P19 Optics - Optical characteristics • Luminance: (600) (min.) cd/m^2 → 600 (min.) cd/m^2 • Contrast ratio: (500) (min.), (800) (typ.) → 500 (min.), 800 (typ.) • Response time - Ton: TBD (typ., max.) ms → (3) (typ.), (5) (max.) ms -Toff: TBD (typ., max.) ms → (15) (typ.), (21) (max.) ms - Ton+Toff (elimination) • Note6: TopF=TBD°C → TopF=(34)°C P22 Reliability tests • Thermal shock: ① -30 ± 3°C…30minutes → ① -40 ± 3°C…30minutes **Writer** *Approved by* R. KAWASHIMA *Checked by* ——— *Prepared by* A. KUMANO
4th edition	DOD-PP-1945	Aug. 26, 2014	**Revision contents** P5 General specifications • Module size: (8.9)mm (typ.) → 8.9mm (typ.) • Weight: (230) g (typ.) → 230 g (typ.) • Response time: (18) ms (typ.) → 8 ms (typ.) • Power consumption: (6.0)W (typ.) → 5.9W (typ.) P7 Mechanical specifications • Module size: (8.9) ± 0.5mm (typ.) → 8.9 ± 0.5mm (typ.) • Weight: (230) g (typ.), (250) g (max.) → 230 (typ.), 250 g (max.) P8 Electrical characteristics - LCD panel signal processing board • Power supply current: (235) (typ.), (330) (max.) mA →195 (typ.), 290 (max.) mA P8, 9 Electrical characteristics - LED driver • Power supply current: (435) (typ.), (480) (max.) mA →435 (typ.), 480 (max.) mA • PWM duty cycle: (1)% (min.) → 1% (min.) • PWM pulse width: (1) μs (min.) → 1 μs (min.) • Note7: (1) μs → 1 μs P10 Power supply voltage sequence - LCD panel signal processing board • (10μs) ≤ Tr < 50ms → 10μs ≤ Tr < 50ms P10 Power supply voltage sequence - LED driver • (0.5ms) < Tr < 100ms → 0.5ms < Tr < 100ms P13 Connection between receiver and transmitter for LVDS • Host - Pin name (change) • Recommended transmitter: DS90C383 → THC63LVDM83C(5S) • Note4 (change)

REVISION HISTORY

Edition	Document number	Prepared date	Revision contents and signature
4th edition	DOD-PP-1945	Aug. 26, 2014	**Revision contents** P19 Optics - Optical characteristics • Luminance uniformity: (1.25) (typ.), (1.4) (max.) → 1.25 (typ.), 1.4 (max.) • Chromaticity: Rx, Ry, Gx, Gy, Bx, By (specified) • Response time - Ton: (3) (typ.), (5) (max.) ms → 3 (typ.), 5 (max.) ms - Toff: (15) (typ.), (21) (max.) ms → 5 (typ.), 8 (max.) ms • Viewing angle - θR, θL: (65)° (min.) → 70° (min.) - θU, θD: (60)° (min.) → 70° (min.) • Note6: TopF= (34) °C → TopF= 34 °C P21 Estimated luminance lifetime • LED elementary substance - 80°C (addition) P26 Outline drawings - Rear view • Right side view (correction) • Labels (addition) **Signature of writer** *Approved by* R. Kawashima — R. KAWASHIMA *Checked by* _____ *Prepared by* E. Yoshimura — E. YOSHIMURA

Our company network supports you worldwide with offices in Germany, Austria, Switzerland, the UK and the USA. For more information please contact:

Headquarters

Germany

FORTEC Elektronik AG
Lechwiesenstr. 9
86899 Landsberg am Lech

Phone: +49 8191 91172-0
E-Mail: sales@fortecag.de
Internet: www.fortecag.de

Fortec Group Members

Austria

FORTEC Elektronik AG
Office Vienna
Nuschinggasse 12
1230 Wien

Phone: +43 1 8673492-0
E-Mail: office@fortec.at
Internet: www.fortec.at

Germany

Distec GmbH
Augsburger Str. 2b
82110 Germering

Phone: +49 89 894363-0
E-Mail: info@distec.de
Internet: www.distec.de

Switzerland

ALTRAC AG
Bahnhofstraße 3
5436 Würenlos

Phone: +41 44 7446111
E-Mail: info@altrac.ch
Internet: www.altrac.ch

United Kingdom

Display Technology Ltd.
Osprey House, 1 Osprey Court
Hichingbrooke Business Park
Huntingdon, Cambridgeshire, PE29 6FN

Phone: +44 1480 411600
E-Mail: info@displaytechnology.co.uk
Internet: www. displaytechnology.co.uk

USA

Apollo Display Technologies, Corp.
87 Raynor Avenue,
Unit 1Ronkonkoma,
NY 11779

Phone: +1 631 5804360
E-Mail: info@apollodisplays.com
Internet: www.apollodisplays.com