FORTEC
ELEKTRONIK AG

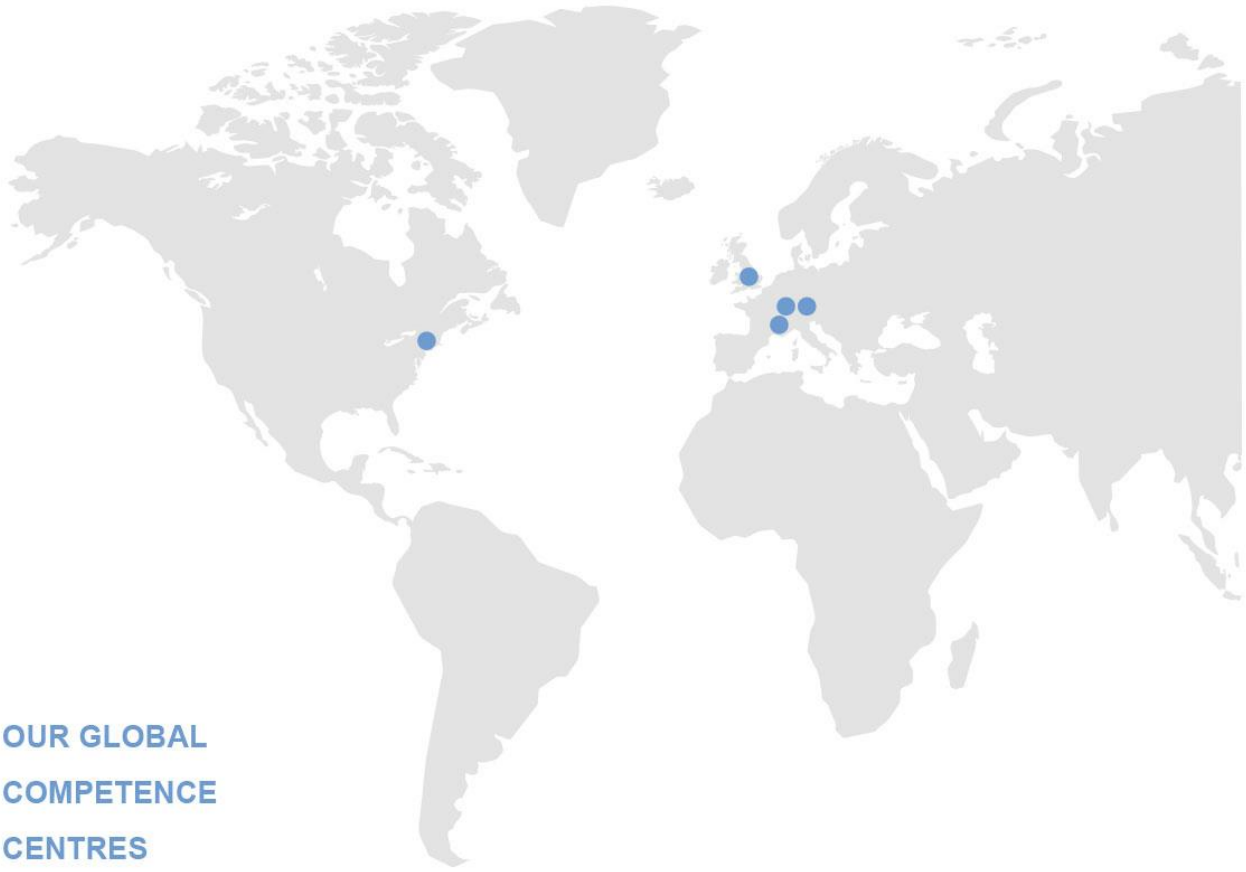

OUR GLOBAL COMPETENCE CENTRES

APOLLO DISPLAY TECHNOLOGIES

DISTEC

DISPLAY TECHNOLOGY

FORTEC
ELEKTRONIK AG

Datasheet

InnoLux

G185BGE-L01 (Rev.C2)

CH-01-047R1.1

The information contained in this document has been carefully researched and is, to the best of our knowledge, accurate. However, we assume no liability for any product failures or damages, immediate or consequential, resulting from the use of the information provided herein. Our products are not intended for use in systems in which failures of product could result in personal injury. All trademarks mentioned herein are property of their respective owners. All specifications are subject to change without notice.

Doc. Number :

☐ Tentative Specification
☐ Preliminary Specification
■ Approval Specification

MODEL NO.: G185BGE
SUFFIX: L01

Customer:

APPROVED BY **SIGNATURE**

Name / Title _____ _____

Note:
Product Version : C2

Please return 1 copy for your confirmation with your signature and comments.

Approved By	Checked By	Prepared By
yuhsiang.chang (張喻翔/514-10922)	yuhsiang.chang (張喻翔/514-10922)	cming.wu (吳承旻/514-10917)
2016-06-20 16:43:43 CST	2016-06-20 16:43:43 CST	2016-06-17 17:11:17 CST

The copyright belongs to CHIMEI InnoLux. Any unauthorized use is prohibited.

CONTENTS

1. GENERAL DESCRIPTION 5
1.1 OVERVIEW 5
1.2 GENERAL SPECIFICATIONS 5
2. MECHANICAL SPECIFICATIONS 5
3. ABSOLUTE MAXIMUM RATINGS 5
3.1 ABSOLUTE RATINGS OF ENVIRONMENT 5
3.2 ELECTRICAL ABSOLUTE RATINGS 6
3.2.1 TFT LCD MODULE 6
3.2.2 BACKLIGHT CONVERTER 6
4. ELECTRICAL SPECIFICATIONS 7
4.1 FUNCTION BLOCK DIAGRAM 7
4.2. INTERFACE CONNECTIONS 7
4.3 ELECTRICAL CHARACTERISTICS 10
4.3.1 LCD ELETRONICS SPECIFICATION 10
4.3.2 Vcc Power Dip Condition 12
4.3.3 BACKLIGHT UNIT 12
4.4 LVDS INPUT SIGNAL SPECIFICATIONS 13
4.4.1 LVDS DATA MAPPING TABLE 13
4.4.2 COLOR DATA INPUT ASSIGNMENT 14
4.5 DISPLAY TIMING SPECIFICATIONS 15
4.6 POWER ON/OFF SEQUENCE 17
5. OPTICAL CHARACTERISTICS 19
5.1 TEST CONDITIONS 19
5.2 OPTICAL SPECIFICATIONS 19
6. RELIABILITY TEST ITEM 22
7. PACKING 23
7.2 PACKING SPECIFICATIONS 23
7.2 PACKING METHOD 23
8. INX MODULE LABEL 25
9. PRECAUTIONS 26
9.1 ASSEMBLY AND HANDLING PRECAUTIONS 26
9.2 STORAGE PRECAUTIONS 26
9.3 OPERATION PRECAUTIONS 26
9.4 SAFETY PRECAUTIONS 26
9.5 SAFETY STANDARDS 27

The copyright belongs to CHIMEI InnoLux. Any unauthorized use is prohibited.

9.6 OTHER 27
Appendix. OUTLINE DRAWING 28

The copyright belongs to CHIMEI InnoLux. Any unauthorized use is prohibited.

REVISION HISTORY

Version	Date	Page	Description
2.0	Apr.6, 2016	All	Spec Ver.2.0 for C2 Version was first issued.
2.1	Jun.17, 2016	All	Company logo changed

The copyright belongs to CHIMEI InnoLux. Any unauthorized use is prohibited.

1. GENERAL DESCRIPTION

1.1 OVERVIEW

G185BGE-L01 is a 18.5" TFT Liquid Crystal IAV Display module with WLED Backlight unit and 30 pins 1ch-LVDS interface. This module supports 1366 x 768 HD mode and can display up to 16.7M colors. The converter module for Backlight is built in.

1.2 GENERAL SPECIFICATIONS

Item	Specification	Unit	Note
Screen Size	18.51" real diagonal		
Driver Element	a-si TFT active matrix	-	-
Pixel Number	1366 x R.G.B. x 768	pixel	-
Pixel Pitch	0.3 (H) x 0.3 (V)	mm	-
Pixel Arrangement	RGB vertical stripe	-	-
Display Colors	16.7M	color	-
Transmissive Mode	Normally white	-	-
Surface Treatment	AG type, 3H hard coating, Haze 25	-	-
Luminance, White	300	cd/m2	
Color Gamut	72% of NTSC(Typ.)	-	-
TCO	TCO 5.0 compliance		
Power Consumption	Total 18.2 W @ cell 3 W , BL 15.2 W		(1)

Note (1) The specified power consumption : Total= cell (reference 4.3.1)+BL (reference 4.3.3)

2. MECHANICAL SPECIFICATIONS

Item		Min.	Typ.	Max.	Unit	Note
Module Size	Horizontal (H)	429.87	430.37	430.87	mm	(1)
	Vertical (V)	254.1	254.6	255.1	mm	
	Thickness (T)	-	16.1	16.6	mm	
Bezel Area	Horizontal	413.1	413.4	413.7	mm	
	Vertical	233.7	234	234.3	mm	
Active Area	Horizontal	-	409.8	-	mm	
	Vertical	-	230.4	-	mm	
Weight		-	1445	1510	g	

Note (1) Please refer to the attached drawings for more information of front and back outline dimensions.

3. ABSOLUTE MAXIMUM RATINGS

3.1 ABSOLUTE RATINGS OF ENVIRONMENT

Item	Symbol	Value		Unit	Note
		Min.	Max.		
Storage Temperature	TST	-20	60	ºC	(1)
Operating Ambient Temperature	TOP	0	60	ºC	(1), (2)

Note (1)

(a) 90 %RH Max. (Ta < 40 ºC).

The copyright belongs to CHIMEI InnoLux. Any unauthorized use is prohibited.

(b) Wet-bulb temperature should be 39 ºC Max.

(c) No condensation.

Note (2) The temperature of panel surface should be 0 ºC min. and 65 ºC max.

3.2 ELECTRICAL ABSOLUTE RATINGS

3.2.1 TFT LCD MODULE

Item	Symbol	Value		Unit	Note
		Min.	Max.		
Power Supply Voltage	VCCS	-0.3	6.0	V	(1)
Logic Input Voltage	V_{IN}	-0.3	3	V	

3.2.2 BACKLIGHT CONVERTER

Item	Symbol	Value			Unit	Note
		Min.	Typ	Max.		
Converter Voltage	LED_V_{in}	0	12.0	18.0	V	(1), (2) Duty=100%
Enable Voltage	LED_EN	0	3.3	5.0	V	
Backlight Adjust	LED_PWM	0	3.3	5.0	V	(1), (2) Pulse Width≦10msec. and Duty≦10%

Note (1) Permanent damage to the device may occur if maximum values are exceeded. Function operation should be restricted to the conditions described under Normal Operating Conditions.

Note (2) Specified values are for input pin of LED light bar at Ta=25±2 ℃ (Refer to 4.3.3 and 4.3.4 for further information).

The copyright belongs to CHIMEI InnoLux. Any unauthorized use is prohibited.

4. ELECTRICAL SPECIFICATIONS

4.1 FUNCTION BLOCK DIAGRAM

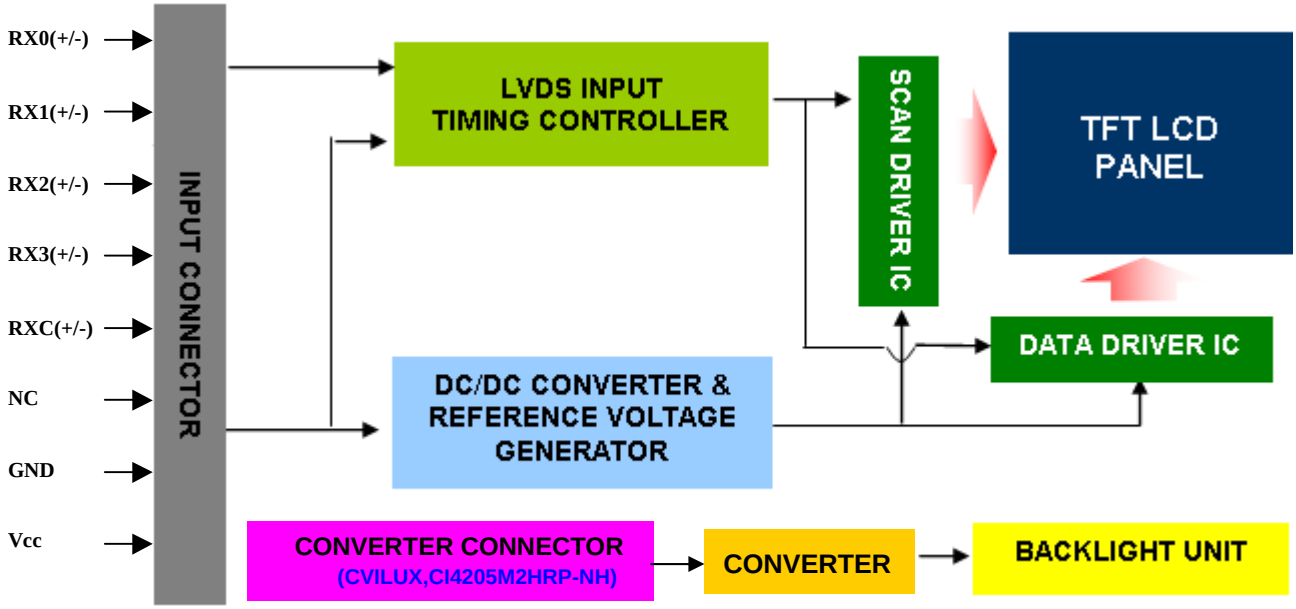

4.2. INTERFACE CONNECTIONS

LVDS I/O PIN ASSIGNMENT

Pin	Name	Description
1	NC	Not connection, this pin should be open.
2	NC	Not connection, this pin should be open.
3	NC	Not connection, this pin should be open.
4	GND	Ground
5	RX0-	Negative LVDS differential data input. Channel 0
6	RX0+	Positive LVDS differential data input. Channel 0
7	GND	Ground
8	RX1-	Negative LVDS differential data input. Channel 1
9	RX1+	Positive LVDS differential data input. Channel 1
10	GND	Ground
11	RX2-	Negative LVDS differential data input. Channel 2
12	RX2+	Positive LVDS differential data input. Channel 2
13	GND	Ground
14	RXCLK-	Negative LVDS differential clock input.
15	RXCLK+	Positive LVDS differential clock input.
16	GND	Ground
17	RX3-	Negative LVDS differential data input. Channel 3
18	RX3+	Positive LVDS differential data input. Channel 3
19	GND	Ground
20	NC	For LCD internal use only, Do not connect
21	NC	For LCD internal use only, Do not connect
22	NC	For LCD internal use only, Do not connect
23	GND	Ground
24	GND	Ground
25	GND	Ground

The copyright belongs to CHIMEI InnoLux. Any unauthorized use is prohibited.

Pin	Name	Description
26	Vcc	+5.0V power supply
27	Vcc	+5.0V power supply
28	Vcc	+5.0V power supply
29	Vcc	+5.0V power supply
30	Vcc	+5.0V power supply

Note (1) Connector Part No.:

FOXXCON GS23302-0111R-7H or MSCK2407P30.D (STM) or equivalent

Note (2) User's connector Part No:

Mating Wire Cable Connector Part No.: FI-X30H(JAE) or FI-X30HL(JAE)

Mating FFC Cable Connector Part No.: 217007-013001 (P-TWO) or JF05X030-1 (JAE).

Note (3) The first pixel is odd.

Note (4) Input signal of even and odd clock should be the same timing.

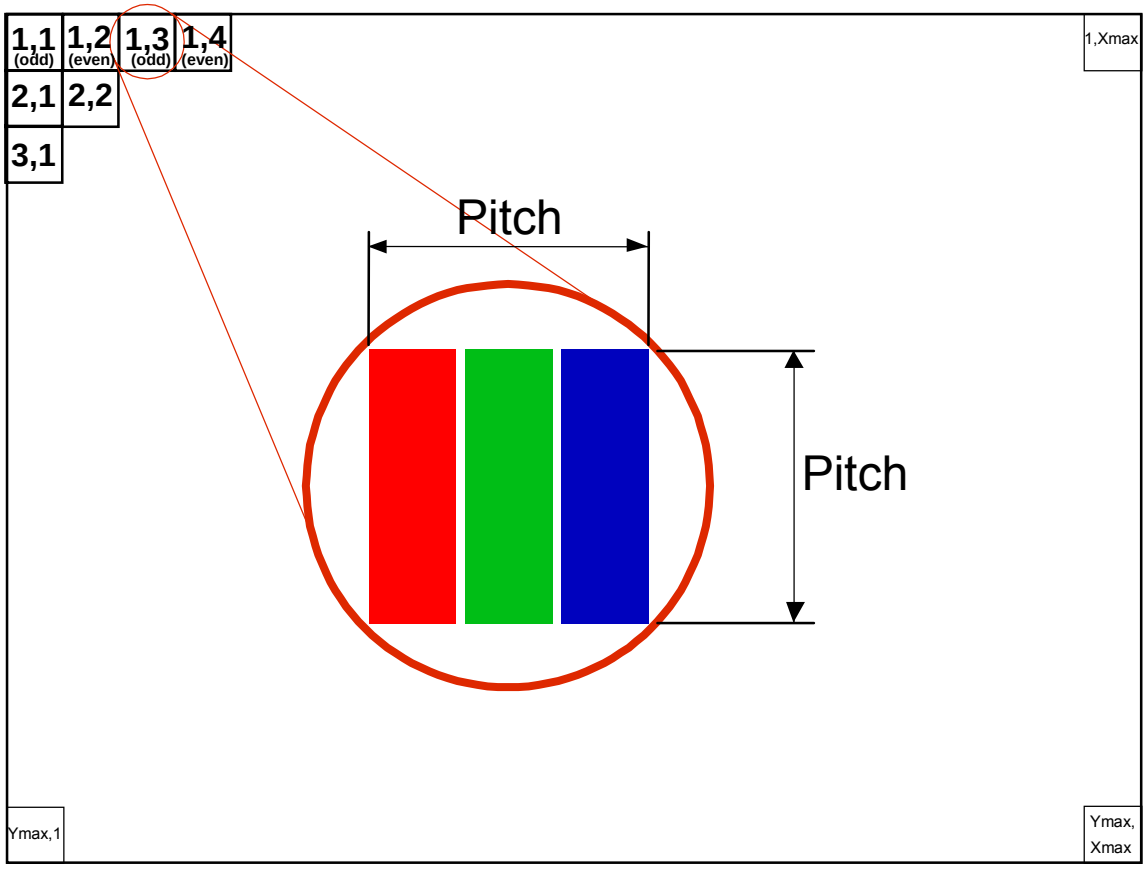

The copyright belongs to CHIMEI InnoLux. Any unauthorized use is prohibited.

BACKLIGHT PIN ASSIGNMENT

Pin	Symbol	Description
1	LED_Vin	Converter Input Voltage
2	GND	Converter Ground
3	LED EN	Backlight ON/OFF
4	LED_PWM	Brightness External PWM Control
5	N.C	Not connection, this pin should be open

Note (1) Connector Part No.:

CVILUX, CI4205M2HRP-NH or equivalent

The copyright belongs to CHIMEI InnoLux. Any unauthorized use is prohibited.

4.3 ELECTRICAL CHARACTERISTICS

4.3.1 LCD ELETRONICS SPECIFICATION

Parameter		Symbol	Value			Unit	Note
			Min.	Typ.	Max.		
Power Supply Voltage		Vcc	4.5	5.0	5.5	V	-
Ripple Voltage		V_{RP}			300	mV	-
Rush Current		I_{RUSH}			3	A	(2)
Power Supply Current	White			0.41	0.54	A	(3)a
	Black			0.57	0.76	A	(3)b
	Vertical Stripe			0.6	0.8	A	(3)c
Power Consumption		PLCD		3.0	4.0	Watt	(4)
LVDS differential input voltage		Vid	200		600	mV	
LVDS common input voltage		Vic	1.0	1.2	1.4	V	

Note (1) The ambient temperature is Ta = 25 ± 2 ºC.

Note (2) Measurement Conditions:

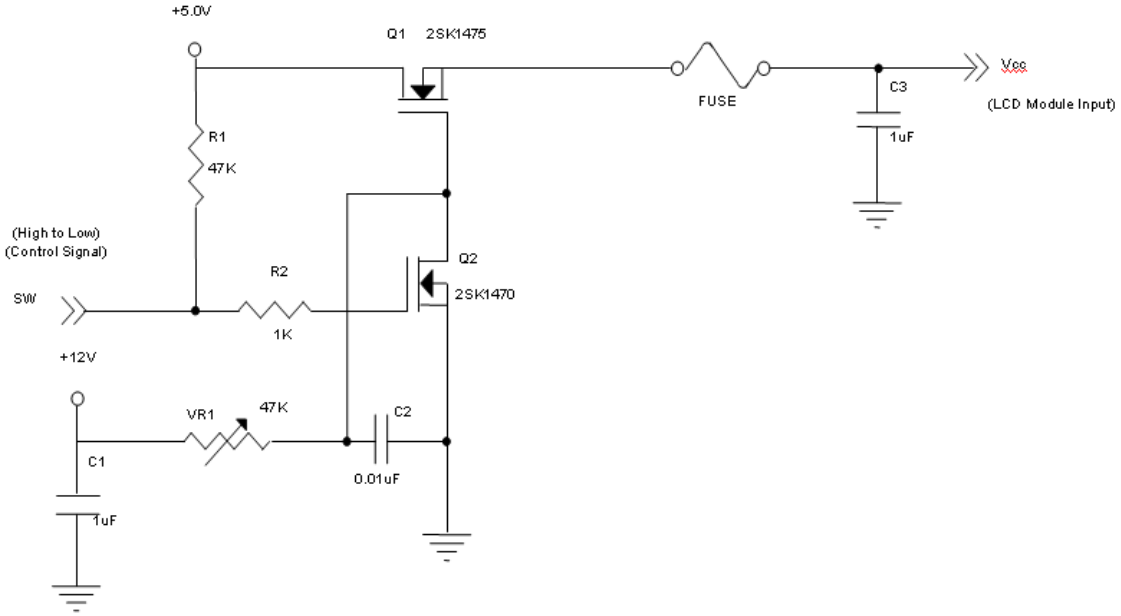

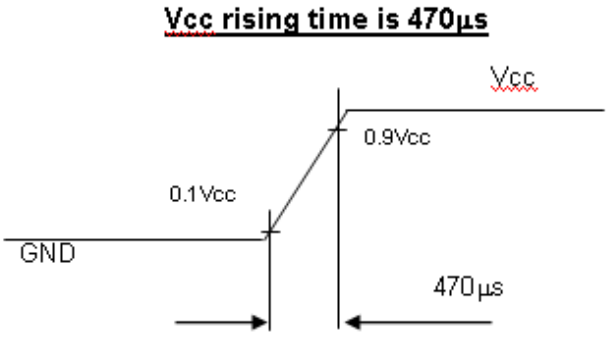

The copyright belongs to CHIMEI InnoLux. Any unauthorized use is prohibited.

Note (3) The specified power supply current is under the conditions at Vcc = 5.0 V, Ta = 25 ± 2 ºC, Fr = 75Hz, whereas a power dissipation check pattern below is displayed.

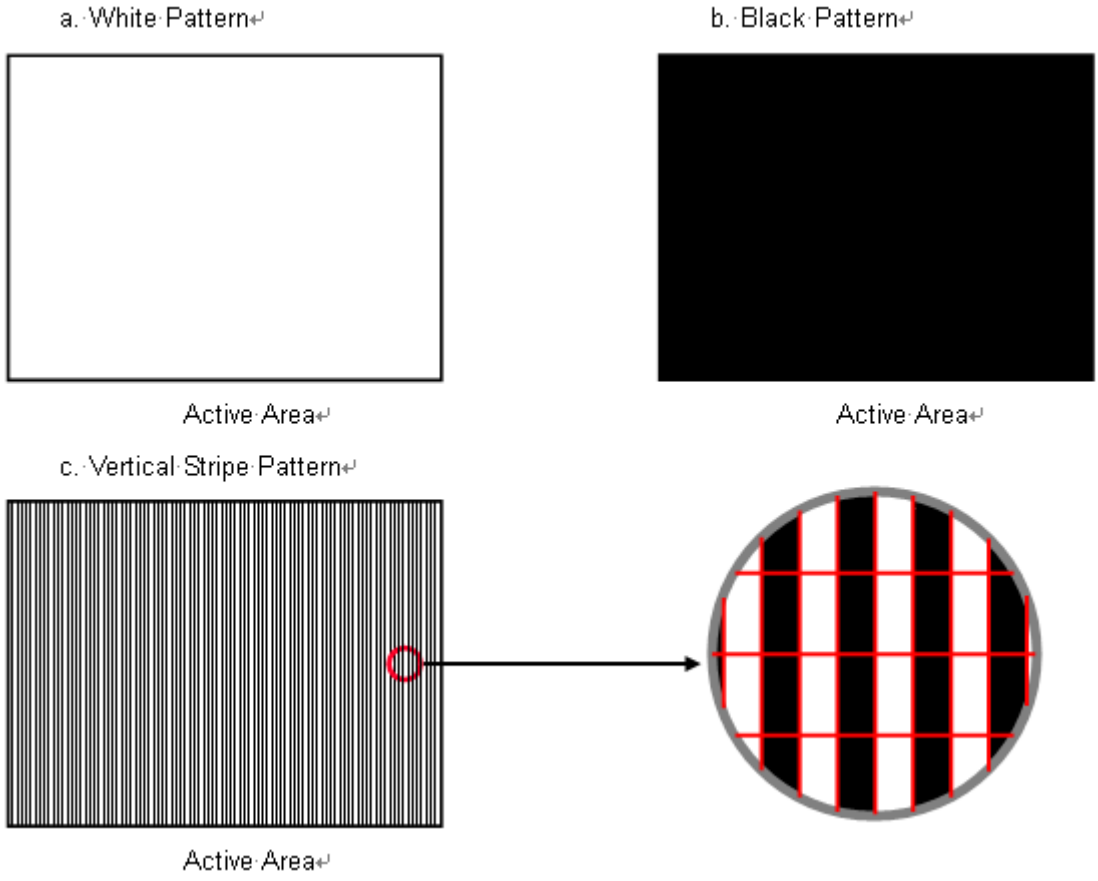

Note (4) The power consumption is specified at the pattern with the maximum current.

Note (5) VID waveform condition

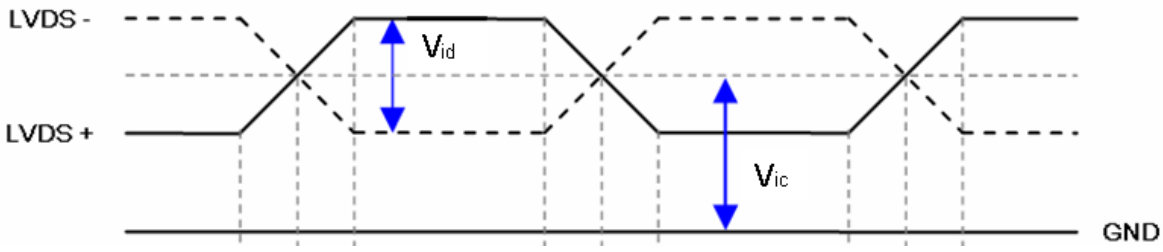

The copyright belongs to CHIMEI InnoLux. Any unauthorized use is prohibited.

4.3.2 Vcc Power Dip Condition

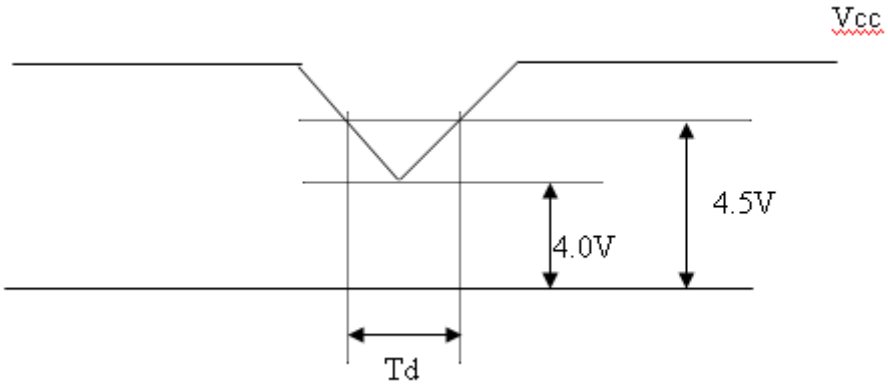

Dip Condition : 4.0V ≦ Vcc ≦ 4.5V, Td ≦ 20mS

4.3.3 BACKLIGHT UNIT

Parameter		Symbol	Value			Unit	Note
			Min.	Typ.	Max.		
Converter Power Supply Voltage		LED_Vin	10.8	11.5	13.2	V	
Converter Power Supply Current		Ii	----	1.25	----	A	@LED_Vin= 12V Duty=100%
Converter Input Rush Current		Iirsh			3	A	@LED_Vin rising = 1mS
Power Consumption		P_{LED}		15.2		W	@ LED_Vin = 12V Duty=100%
EN Control Level	Backlight on	LED_EN	2.0	3.3	5.0	V	
	Backlight off		0	0	0.8		
PWM Control Level	PWM High Level	LED_PWM	2.0	3.3	5.0	V	
	PWM Low Level		0	0	0.15		
PWM Control Duty Ratio			10	--	100	%	
PWM Control Frequency		f_{PWM}	200	200	10k	Hz	
LED Life Time		L_L	50,000			Hrs	(2)

Note (1) LED current is measured by utilizing a high frequency current meter as shown below:

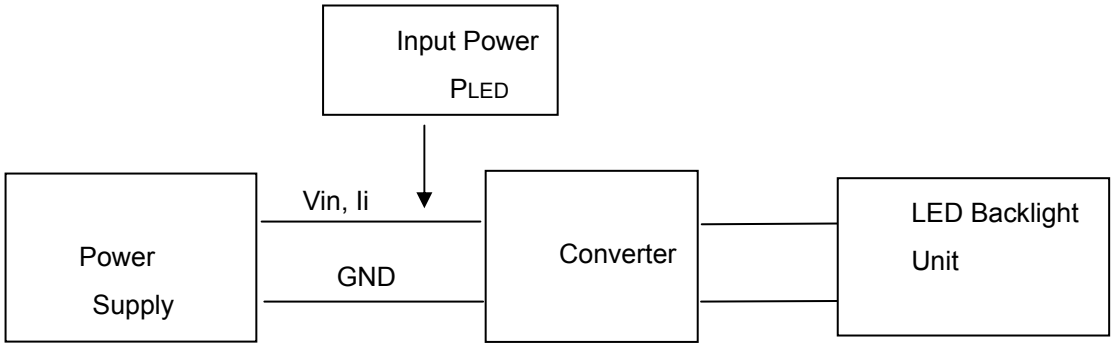

The copyright belongs to CHIMEI InnoLux. Any unauthorized use is prohibited.

Note (2) The lifetime of LED is defined as the time when LED packages continue to operate under the conditions at Ta = 25 ±2 ℃ and I= (80)mA (per chip) until the brightness becomes ≦ 50% of its original value.

Note (3) If PWM control frequency is applied in the range less than 1KHz, The “waterfall” phenomenon on the screen may be found. To avoid this issue, It’s a suggestion that PWM control frequency should follow the criterion as below.

$$(N+0.4)*f < fpwm < (N+0.6)*f$$

fpwm : PWM control frequency

f : Frame rate

N : Integer ($N \geqq 3$)

4.4 LVDS INPUT SIGNAL SPECIFICATIONS

4.4.1 LVDS DATA MAPPING TABLE

LVDS Channel 0	LVDS output	D7	D6	D4	D3	D2	D1	D0
	Data order	G0	R5	R4	R3	R2	R1	R0
LVDS Channel 1	LVDS output	D18	D15	D14	D13	D12	D9	D8
	Data order	B1	B0	G5	G4	G3	G2	G1
LVDS Channel 2	LVDS output	D26	D25	D24	D22	D21	D20	D19
	Data order	DE	NA	NA	B5	B4	B3	B2
LVDS Channel 3	LVDS output	D23	D17	D16	D11	D10	D5	D27
	Data order	NA	B7	B6	G7	G6	R7	R6

The copyright belongs to CHIMEI InnoLux. Any unauthorized use is prohibited.

4.4.2 COLOR DATA INPUT ASSIGNMENT

The brightness of each primary color (red, green and blue) is based on the 8-bit gray scale data input for the color. The higher the binary input, the brighter the color. The table below provides the assignment of color versus data input.

Color		Data Signal																							
		Red								Green								Blue							
		R7	R6	R5	R4	R3	R2	R1	R0	G7	G6	G5	G4	G3	G2	G1	G0	B7	B6	B5	B4	B3	B2	B1	B0
Basic Colors	Black	0	0	0	0	0	0	0	0	0	0	0	0	0	0	0	0	0	0	0	0	0	0	0	0
	Red	1	1	1	1	1	1	1	1	0	0	0	0	0	0	0	0	0	0	0	0	0	0	0	0
	Green	0	0	0	0	0	0	0	0	1	1	1	1	1	1	1	1	0	0	0	0	0	0	0	0
	Blue	0	0	0	0	0	0	0	0	0	0	0	0	0	0	0	0	1	1	1	1	1	1	1	1
	Cyan	0	0	0	0	0	0	0	0	1	1	1	1	1	1	1	1	1	1	1	1	1	1	1	1
	Magenta	1	1	1	1	1	1	1	1	0	0	0	0	0	0	0	0	1	1	1	1	1	1	1	1
	Yellow	1	1	1	1	1	1	1	1	1	1	1	1	1	1	1	1	0	0	0	0	0	0	0	0
	White	1	1	1	1	1	1	1	1	1	1	1	1	1	1	1	1	1	1	1	1	1	1	1	1
Gray Scale Of Red	Red(0) / Dark	0	0	0	0	0	0	0	0	0	0	0	0	0	0	0	0	0	0	0	0	0	0	0	0
	Red(1)	0	0	0	0	0	0	0	1	0	0	0	0	0	0	0	0	0	0	0	0	0	0	0	0
	Red(2)	0	0	0	0	0	0	1	0	0	0	0	0	0	0	0	0	0	0	0	0	0	0	0	0
	:	:	:	:	:	:	:	:	:	:	:	:	:	:	:	:	:	:	:	:	:	:	:	:	:
	:	:	:	:	:	:		:		:		:		:	:	:			:		:	:	:	:	
	Red(253)	1	1	1	1	1	1	0	1	0	0	0	:0	0	0	0	0	0	0	0	0	0	0	0	:0
	Red(254)	1	1	1	1	1	1	1	0	0	0	0	0	0	0	0	0	0	0	0	0	0	0	0	0
	Red(255)	1	1	1	1	1	1	1	1	0	0	0	0	0	0	0	0	0	0	0	0	0	0	0	0
Gray Scale Of Green	Green(0) / Dark	0	0	0	0	0	0	0	0	0	0	0	0	0	0	0	0	0	0	0	0	0	0	0	0
		0	0	0	0	0	0	0	0	0	0	0	0	0	0	0	1	0	0	0	0	0	0	0	0
	Green(1)	0	0	0	0	0	0	0	0	0	0	0	0	0	0	1	0	0	0	0	0	0	0	0	0
	Green(2)	:	:	:	:	:	:	:	:	:	:	:	:	:	:	:	:	:	:	:	:	:	:	:	:
	:	:	:	:	:	:	:	:	:	:	:	:	:	:	:	:	:	:	:	:	:	:	:	:	:
	:	0	0	0	0	0	0	0	0	1	1	1	1	1	1	0	1	0	0	0	0	0	0	0	0
	Green(253)	0	0	0	0	0	0	0	0	1	1	1	1	1	1	1	0	0	0	0	0	0	0	0	0
	Green(254)	0	0	0	0	0	0	0	0	1	1	1	1	1	1	1	1	0	0	0	0	0	0	0	0
	Green(255)																								
Gray Scale Of Blue	Blue(0) / Dark	0	0	0	0	0	0	0	0	0	0	0	0	0	0	0	0	0	0	0	0	0	0	0	0
	Blue(1)	0	0	0	0	0	0	0	0	0	0	0	0	0	0	0	0	0	0	0	0	0	0	0	1
	Blue(2)	0	0	0	0	0	0	0	0	0	0	0	0	0	0	0	0	0	0	0	0	0	0	1	0
	:	:	:	:	:	:	:	:	:	:	:	:	:	:	:	:	:	:	:	:	:	:	:	:	:
	:	:	:	:	:	:	:	:	:	:	:	:	:	:	:	:	:	:	:	:	:	:	:	:	:
	Blue(253)	0	0	0	0	0	0	0	0	0	0	0	0	0	0	0	0	1	1	1	1	1	1	0	1
	Blue(254)	0	0	0	0	0	0	0	0	0	0	0	0	0	0	0	0	1	1	1	1	1	1	1	0
	Blue(255)	0	0	0	0	0	0	0	0	0	0	0	0	0	0	0	0	1	1	1	1	1	1	1	1

Note (1) 0: Low Level Voltage, 1: High Level Voltage

The copyright belongs to CHIMEI InnoLux. Any unauthorized use is prohibited.

4.5 DISPLAY TIMING SPECIFICATIONS

The input signal timing specifications are shown as the following table and timing diagram.

Signal	Item	Symbol	Min.	Typ.	Max.	Unit	Note
LVDS Clock	Frequency	Fc	60	76	96	MHz	-
	Period	Tc		13.0		ns	
	Input cycle to cycle jitter	T_{rcl}			200	ns	(1)
	Input Clock to data skew	TLVCCS	-400		+400	ps	(2)
	Spread spectrum modulation range	Fclkin_mod	Fc*98%		Fc*102%	MHz	(3)
	Spread spectrum modulation frequency	F_{SSM}			200	KHz	
Vertical Display Term	Frame Rate	Fr	50	60	75	Hz	Tv=Tvd+Tvb
	Total	Tv	800	806	815	Th	-
	Active Display	Tvd	768	768	768	Th	-
	Blank	Tvb	Tv-Tvd	38	Tv-Tvd	Th	-
Horizontal Display Term	Total	Th	1500	1560	1570	Tc	Th=Thd+Thb
	Active Display	Thd	1366	1366	1366	Tc	-
	Blank	Thb	Th-Thd	194	Th-Thd	Tc	-

Note: Because this module is operated by DE only mode, Hsync and Vsync input signals are ignored.

INPUT SIGNAL TIMING DIAGRAM

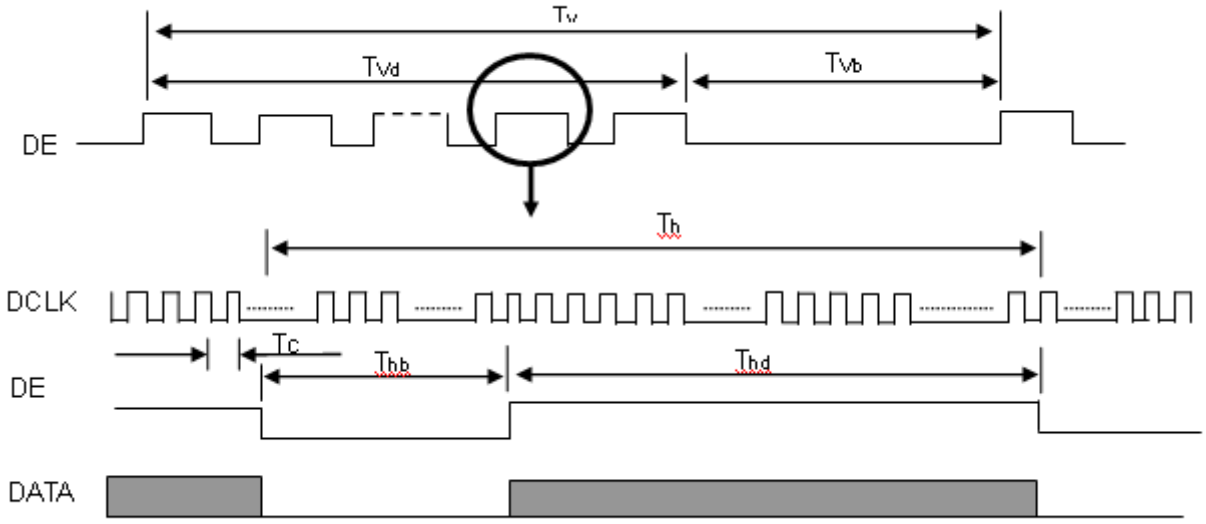

The copyright belongs to CHIMEI InnoLux. Any unauthorized use is prohibited.

Note (1) The input clock cycle-to-cycle jitter is defined as below figures. Trcl = I T_1 – TI

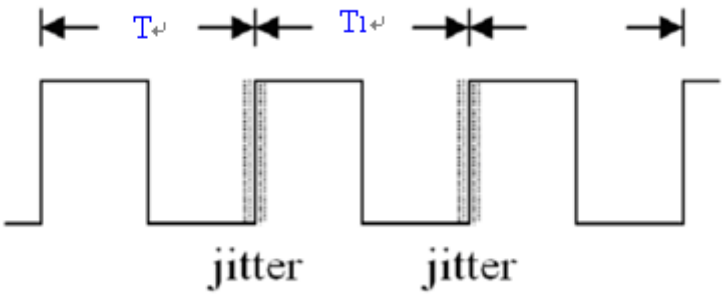

Note (2) Input Clock to data skew is defined as below figures.

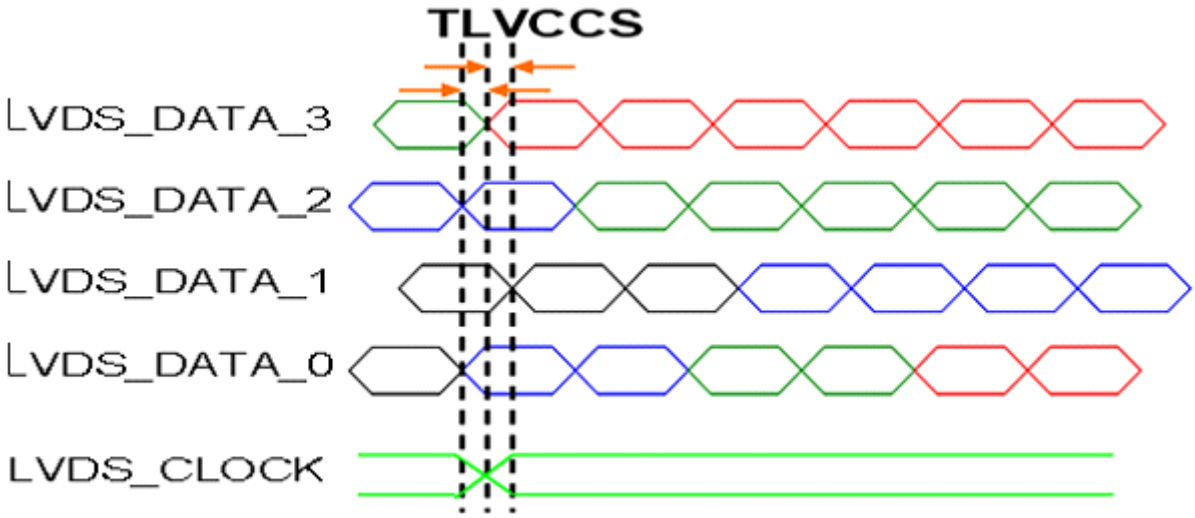

Note (3) The SSCG (Spread spectrum clock generator) is defined as below figures.

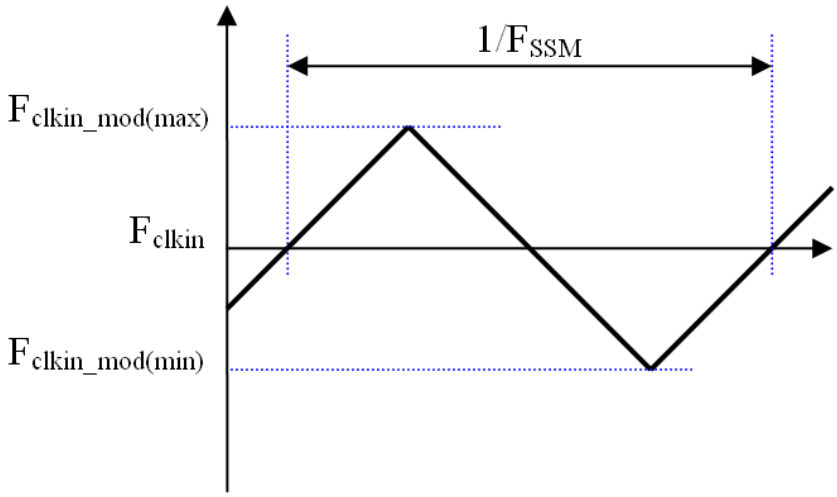

The copyright belongs to CHIMEI InnoLux. Any unauthorized use is prohibited.

4.6 POWER ON/OFF SEQUENCE

The power sequence specifications are shown as the following table and diagram.

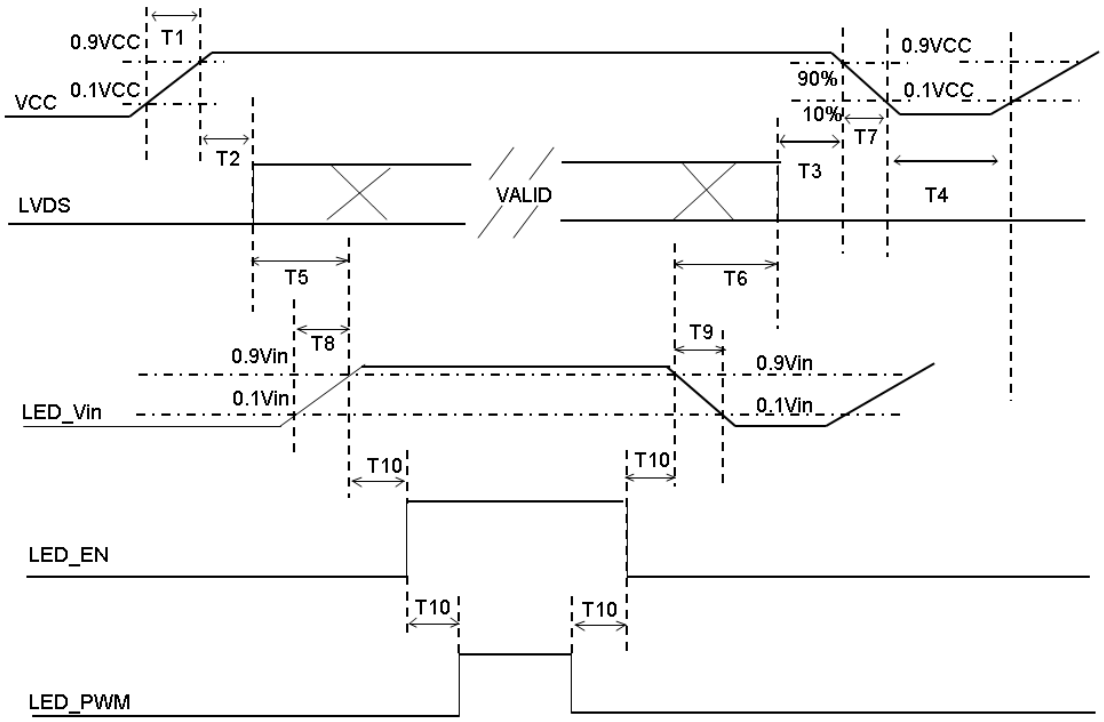

Timing Specifications:

Parameters	Values			Units
	Min	Typ.	Max	
T1	0.5	-	5	ms
T2	0	-	50	ms
T3	0	-	50	ms
T4	500	-	-	ms
T5	430	-	-	ms
T6	70	-	-	ms
T7	5	-	100	ms
T8	5	-	30	ms
T9	0	-	10	ms
T10	10	-	-	ms

Note (1) The supply voltage of the external system for the module input should be the same as the definition of Vcc.

Note (2) When the backlight turns on before the LCD operation of the LCD turns off, the display may momentarily become abnormal screen.

Note (3) In case of VCC = off level, please keep the level of input signals on the low or keep a high impedance.

Note (4) T4 should be measured after the module has been fully discharged between power off and on period.

Note (5) Interface signal shall not be kept at high impedance when the power is on.

The copyright belongs to CHIMEI InnoLux. Any unauthorized use is prohibited.

Note (6) CMI won＇t take any responsibility for the products which are damaged by the customers not following the Power Sequence.

Note (7) There might be slight electronic noise when LCD is turned off (even backlight unit is also off). To avoid this symptom, we suggest "Vcc falling timing" to follow "T7 spec".

The copyright belongs to CHIMEI InnoLux. Any unauthorized use is prohibited.

5. OPTICAL CHARACTERISTICS

5.1 TEST CONDITIONS

Item	Symbol	Value	Unit
Ambient Temperature	Ta	25±2	°C
Ambient Humidity	Ha	50±10	%RH
Supply Voltage	V_{CC}	3.2	V
Input Signal	According to typical value in "3. ELECTRICAL CHARACTERISTICS"		
LED Light Bar Current	I_{PIN}	80 ± 1.5	mA_{DC}
PWM Duty Ratio	D	100	%

5.2 OPTICAL SPECIFICATIONS

The relative measurement methods of optical characteristics are shown in 5.2. The following items should be measured under the test conditions described in 5.1 and stable environment shown in Note (5).

Item		Symbol	Condition	Min.	Typ.	Max.	Unit	Note
Color Chromaticity (CIE 1931)	Red	Rx	θ_x=0°, θ_Y =0° CS-2000 R=G=B=255 Gray scale	Typ – 0.05	0.643	Typ + 0.05	-	(1), (5)
		Ry			0.342			
	Green	Gx			0.313			
		Gy			0.618			
	Blue	Bx			0.153			
		By			0.059			
	White	Wx			0.313			
		Wy			0.329			
Center Luminance of White (Center of Screen)		L_C		250	300	-	cd/m^2	(4), (5)
Contrast Ratio		CR		700	1000	-	-	(2), (5)
Response Time		T_R	θ_x=0°, θ_Y =0°	-	1.5	2.5	ms	(3)
		T_F		-	3.5	5.5		
White Variation		W	$_x$=0, $_Y$ =0	75	-	-	%	(5), (6)
Viewing Angle	Horizontal	θx- + θx+	CR ≧ 10	150	170	-	Deg.	(1), (5)
	Vertical	θy- + θy+		140	160	-		
Viewing Angle	Horizontal	θx- + θx+	CR ≧ 5	160	178	---	Deg.	(1), (5)
	Vertical	θy- + θy+		150	170	---		

The copyright belongs to CHIMEI InnoLux. Any unauthorized use is prohibited.

Note (1) Definition of Viewing Angle (θx, θy):

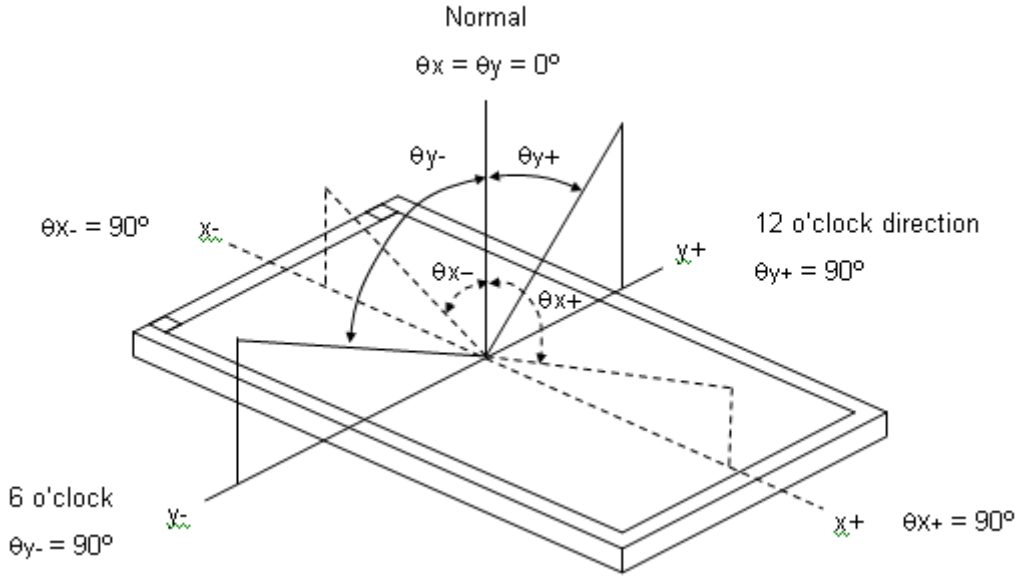

Note (2) Definition of Contrast Ratio (CR):

The contrast ratio can be calculated by the following expression.

Contrast Ratio (CR) = L255 / L0

L255: Luminance of gray level 255

L 0: Luminance of gray level 0

CR = CR (5)

CR (X) is corresponding to the Contrast Ratio of the point X at Figure in Note (6).

Note (3) Definition of Response Time (T_R, T_F):

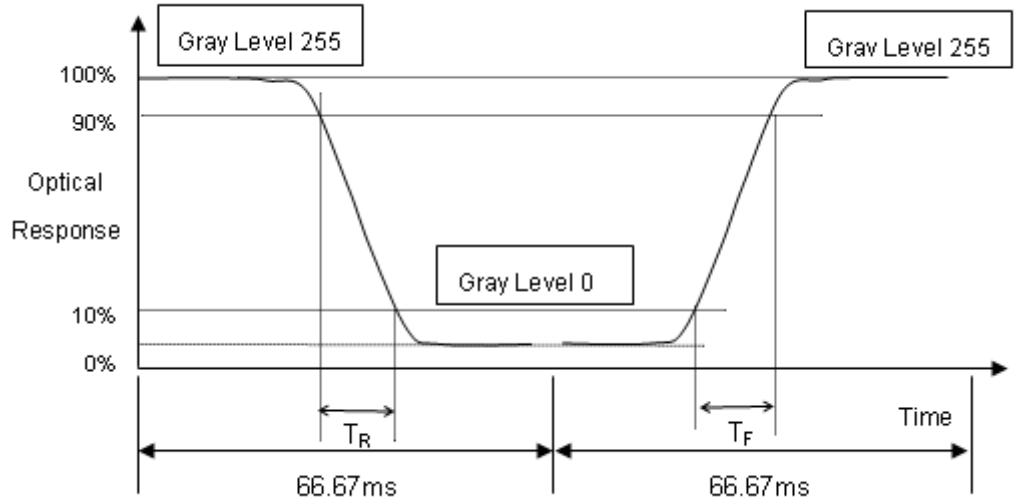

The copyright belongs to CHIMEI InnoLux. Any unauthorized use is prohibited.

Note (4) Definition of Luminance of White (L_C):

Measure the luminance of gray level 255 at center point

L_C = L (5)

L (x) is corresponding to the luminance of the point X at Figure in Note (6).

Note (5) Measurement Setup:

The LCD module should be stabilized at given temperature for 40 minutes to avoid abrupt temperature change during measuring. In order to stabilize the luminance, the measurement should be executed after lighting Backlight for 40 minutes in a windless room.

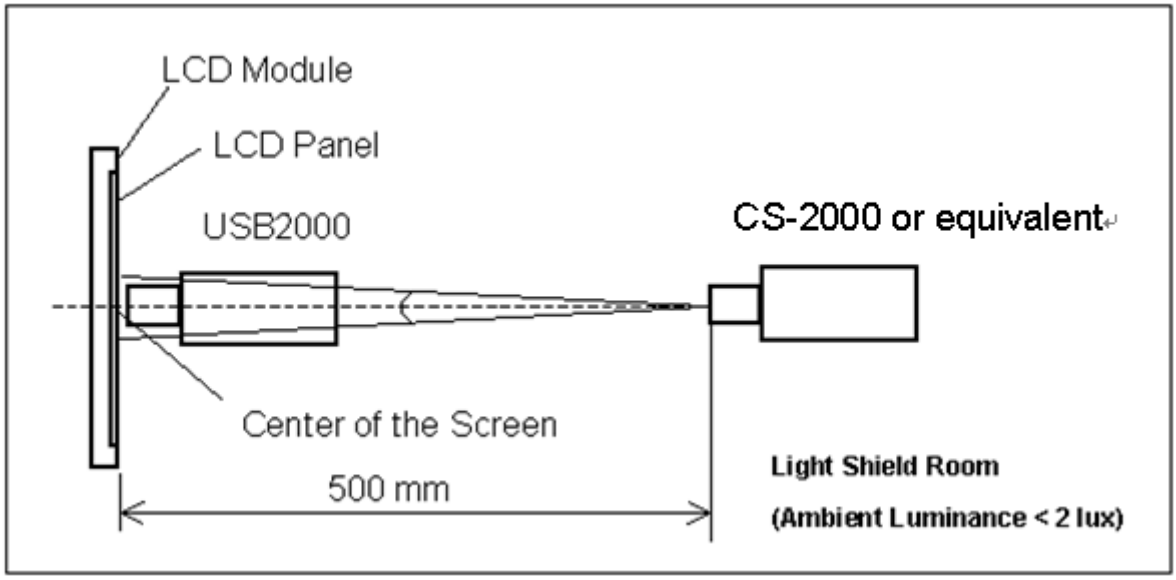

Note (6) Definition of White Variation (δW):

Measure the luminance of gray level 255 at 9 points

δW = (Minimum [L (1) ~ L (9)] / Maximum [L (1) ~ L (9)])*100%

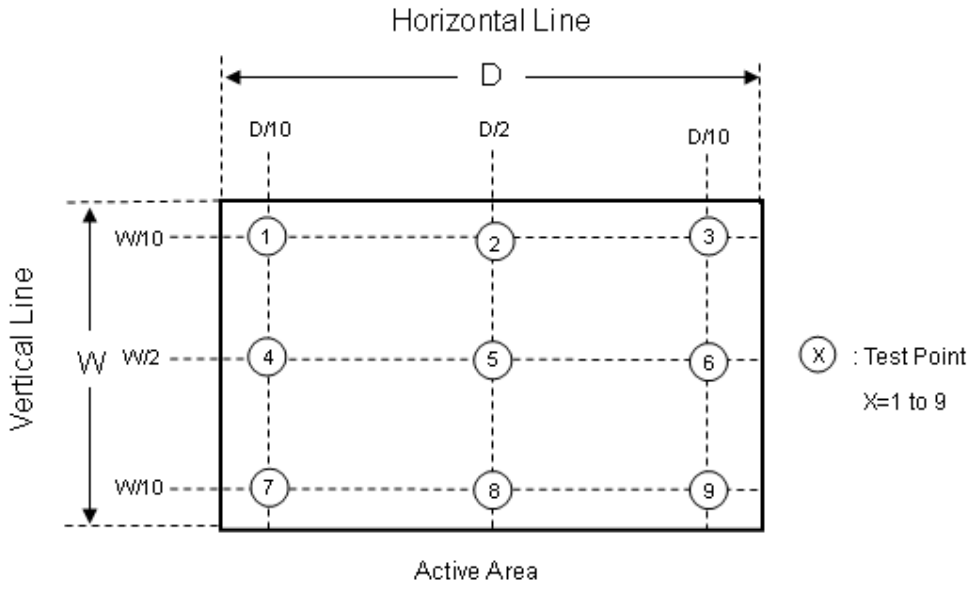

The copyright belongs to CHIMEI InnoLux. Any unauthorized use is prohibited.

6. RELIABILITY TEST ITEM

Items	Required Condition	Note
Temperature Humidity Bias (THB)	Ta= 50℃ , 80%RH, 240hours	
High Temperature Operation (HTO)	(Ta= 60℃ , 50%RH , 240hours)	
Low Temperature Operation (LTO)	Ta= 0℃ , 240hours	
High Temperature Storage (HTS)	Ta= 60℃ , 240hours	
Low Temperature Storage (LTS)	Ta= -20℃ , 240hours	
Vibration Test (Non-operation)	Acceleration: 1.5 Grms Wave: Half-sine Frequency: 10 - 300 Hz Sweep: 30 Minutes each Axis (X, Y, Z)	
Shock Test (Non-operation)	Acceleration: 50 G Wave: Half-sine Active Time: 11 ms Direction : ± X, ± Y, ± Z.(one time for each Axis)	
Thermal Shock Test (TST)	-20℃/30min , 60℃ / 30min , 100 cycles	
On/Off Test	25℃ ,On/10sec , Off /10sec , 30,000 cycles	
ESD (Electro Static Discharge)	Contact Discharge: ± 8KV, 150pF(330Ω)	
	Air Discharge: ± 15KV, 150pF(330Ω)	
Altitude Test	Operation:10,000 ft / 24hours Non-Operation:30,000 ft / 24hours	

Note (1) criteria : Normal display image with no obvious non-uniformity and no line defect.

Note (2) Evaluation should be tested after storage at room temperature for more than two hour

Note (3) At testing Vibration and Shock, the fixture in holding the module has to be hard and rigid enough so that the module would not be twisted or bent by the fixture.

The fixing condition is shown as below:

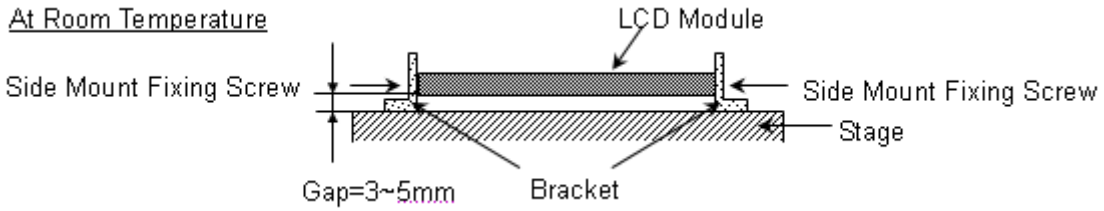

The copyright belongs to CHIMEI InnoLux. Any unauthorized use is prohibited.

7. PACKING

7.1 PACKING SPECIFICATIONS

(1) 8pcs LCD modules / 1 Box

(2) Box dimensions: 525(L)*284(W)*360(H)mm

(3) Weight: approximately 21Kg (8 modules per box)

7.2 PACKING METHOD

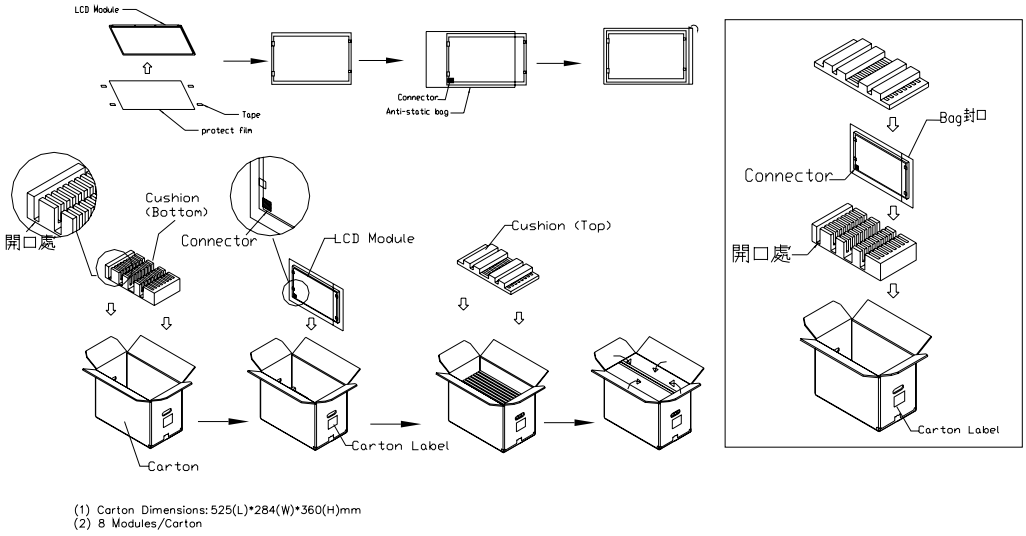

Figure. 7-1 Packing

The copyright belongs to CHIMEI InnoLux. Any unauthorized use is prohibited.

Sea / Land Transportation
(40ft HQ Container)

Sea / Land Transportation
(40ft Container)

Air Transportation

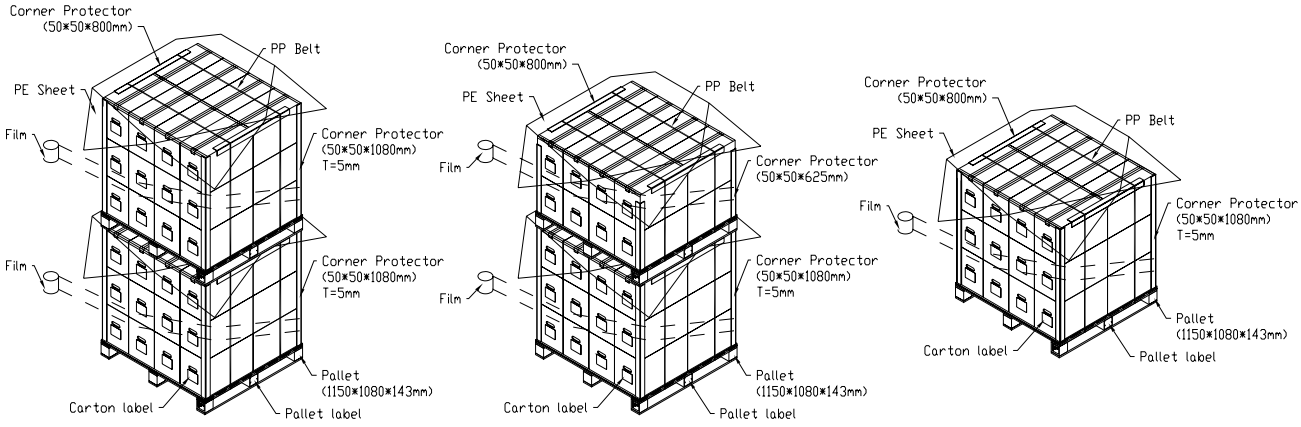

Figure. 7-2 Packing

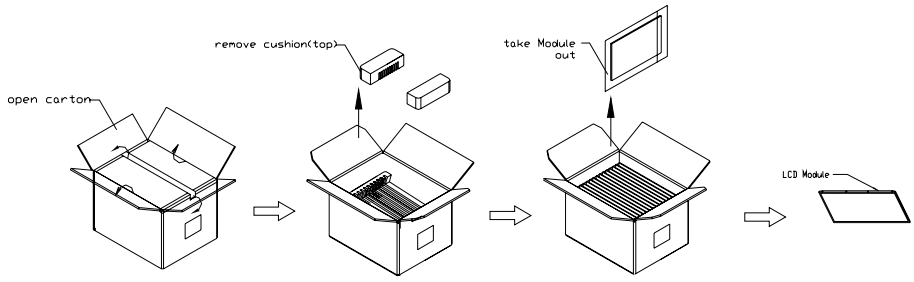

Figure. 7-3 Un-Packing

The copyright belongs to CHIMEI InnoLux. Any unauthorized use is prohibited.

8. INX MODULE LABEL

The barcode nameplate is pasted on each module as illustration, and its definitions are as following explanation.

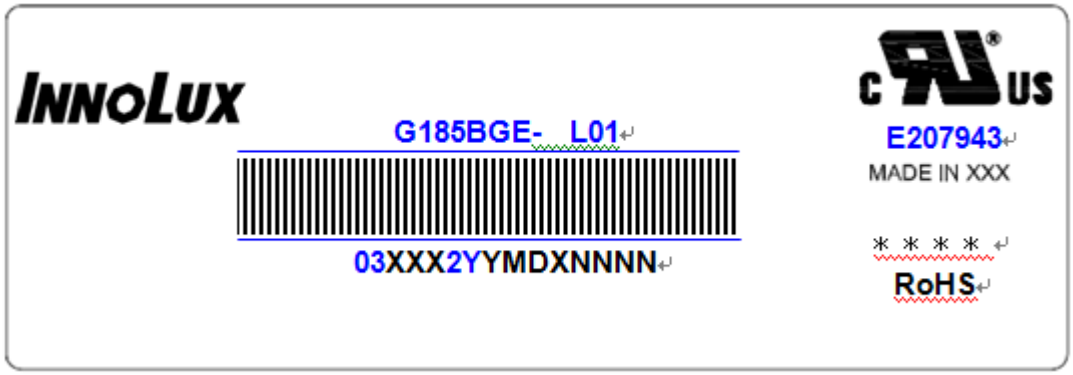

(a) Model Name: G185BGE-L01

(b) * * * *: Factory ID

(c) Serial ID: X X X X X X Y M D X N N N N

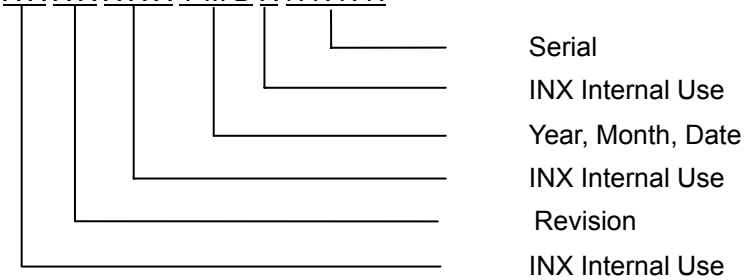

Serial ID includes the information as below:

(a) Manufactured Date: Year: 1~9, for 2011~2019

Month: 1~9, A~C, for Jan. ~ Dec.

Day: 1~9, A~Y, for 1st to 31st, exclude I , O and U

(b) Revision Code: cover all the change

(c) Serial No.: Manufacturing sequence of product

The copyright belongs to CHIMEI InnoLux. Any unauthorized use is prohibited.

9. PRECAUTIONS

9.1 ASSEMBLY AND HANDLING PRECAUTIONS

(1) Do not apply rough force such as bending or twisting to the module during assembly.

(2) To assemble or install module into user's system can be only in clean working areas. The dust and oil may cause electrical short or worsen the polarizer.

(3) It's not permitted to have pressure or impulse on the module because the LCD panel and Backlight will be damaged.

(4) Always follow the correct power sequence when LCD module is connecting and operating. This can prevent damage to the CMOS LSI chips during latch-up.

(5) Do not pull the I/F connector in or out while the module is operating.

(6) Do not disassemble the module.

(7) Use a soft dry cloth without chemicals for cleaning, because the surface of polarizer is very soft and easily scratched.

(8) It is dangerous that moisture come into or contacted the LCD module, because moisture may damage LCD module when it is operating.

(9) High temperature or humidity may reduce the performance of module. Please store LCD module within the specified storage conditions.

(10)When ambient temperature is lower than 10ºC may reduce the display quality. For example, the response time will become slowly.

9.2 STORAGE PRECAUTIONS

(1) Do not leave the module in high temperature, and high humidity for a long time. It is highly recommended to store the module with temperature from 0℃ to 35℃ and relative humidity of less than 70%

(2) Do not store the TFT – LCD module in direct sunlight

(3) The module should be stored in dark place. It is prohibited to apply sunlight or fluorescent light in storing

9.3 OPERATION PRECAUTIONS

(1) The LCD product should be operated under normal condition.

Normal condition is defined as below :

Temperature : 20±15℃

Humidity: 65±20%

Display pattern : continually changing pattern(Not stationary)

(2) If the product will be used in extreme conditions such as high temperature, high humidity, high altitude ,display pattern or operation time etc…It is strongly recommended to contact CMI for application engineering advice . Otherwise , Its reliability and function may not be guaranteed.

9.4 SAFETY PRECAUTIONS

(1) If the liquid crystal material leaks from the panel, it should be kept away from the eyes or mouth. In case of contact with hands, skin or clothes, it has to be washed away thoroughly with soap.

(2) After the module's end of life, it is not harmful in case of normal operation and storage.

The copyright belongs to CHIMEI InnoLux. Any unauthorized use is prohibited.

9.5 SAFETY STANDARDS

The LCD module should be certified with safety regulations as follows:

(1) UL60950-1 or updated standard.

(2) IEC60950-1 or updated standard.

9.6 OTHER

When fixed patterns are displayed for a long time, remnant image is likely to occur.

The copyright belongs to CHIMEI InnoLux. Any unauthorized use is prohibited.

APPENDIX. OUTLINE DRAWING-1

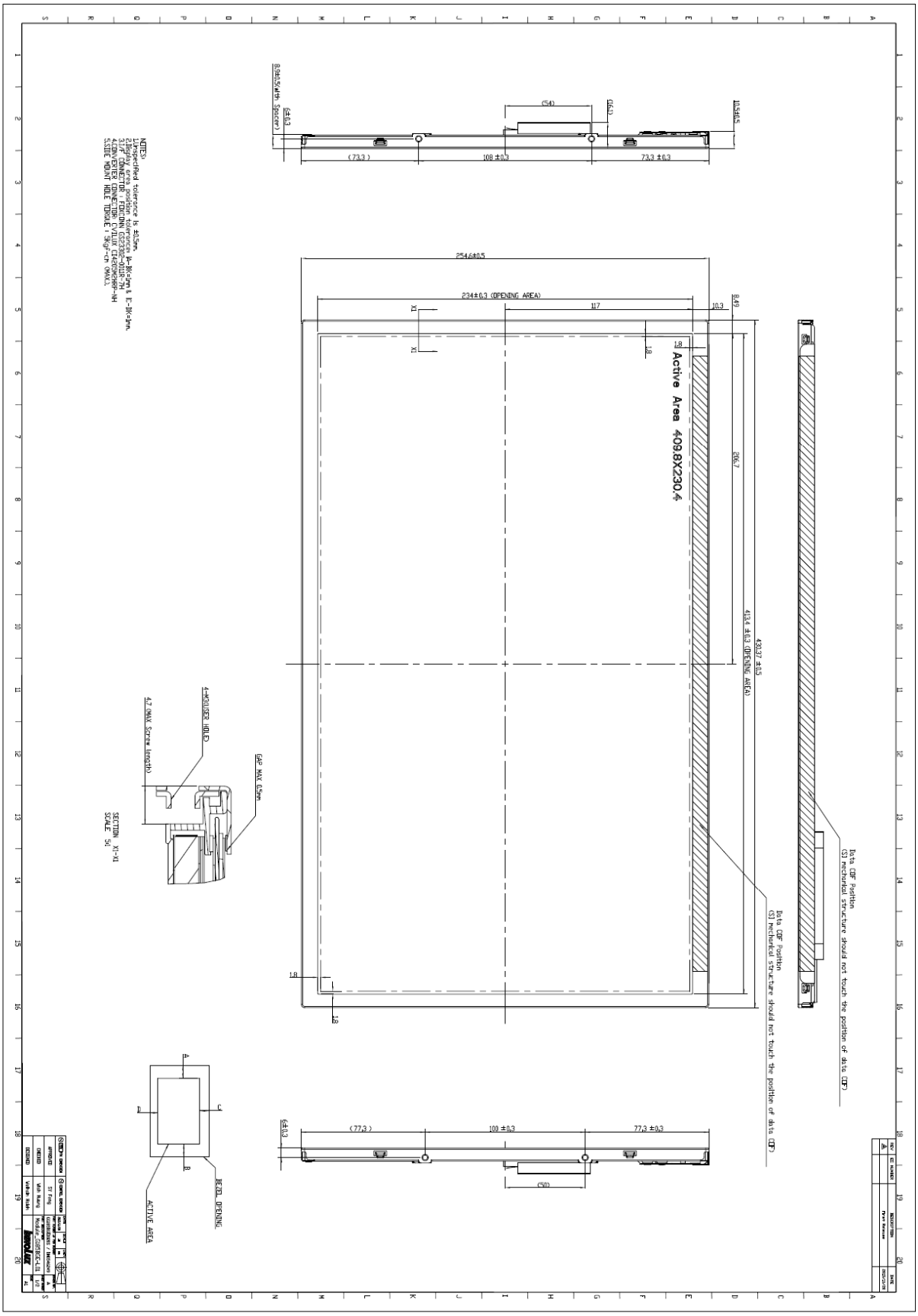

The copyright belongs to CHIMEI InnoLux. Any unauthorized use is prohibited.

APPENDIX. OUTLINE DRAWING-2

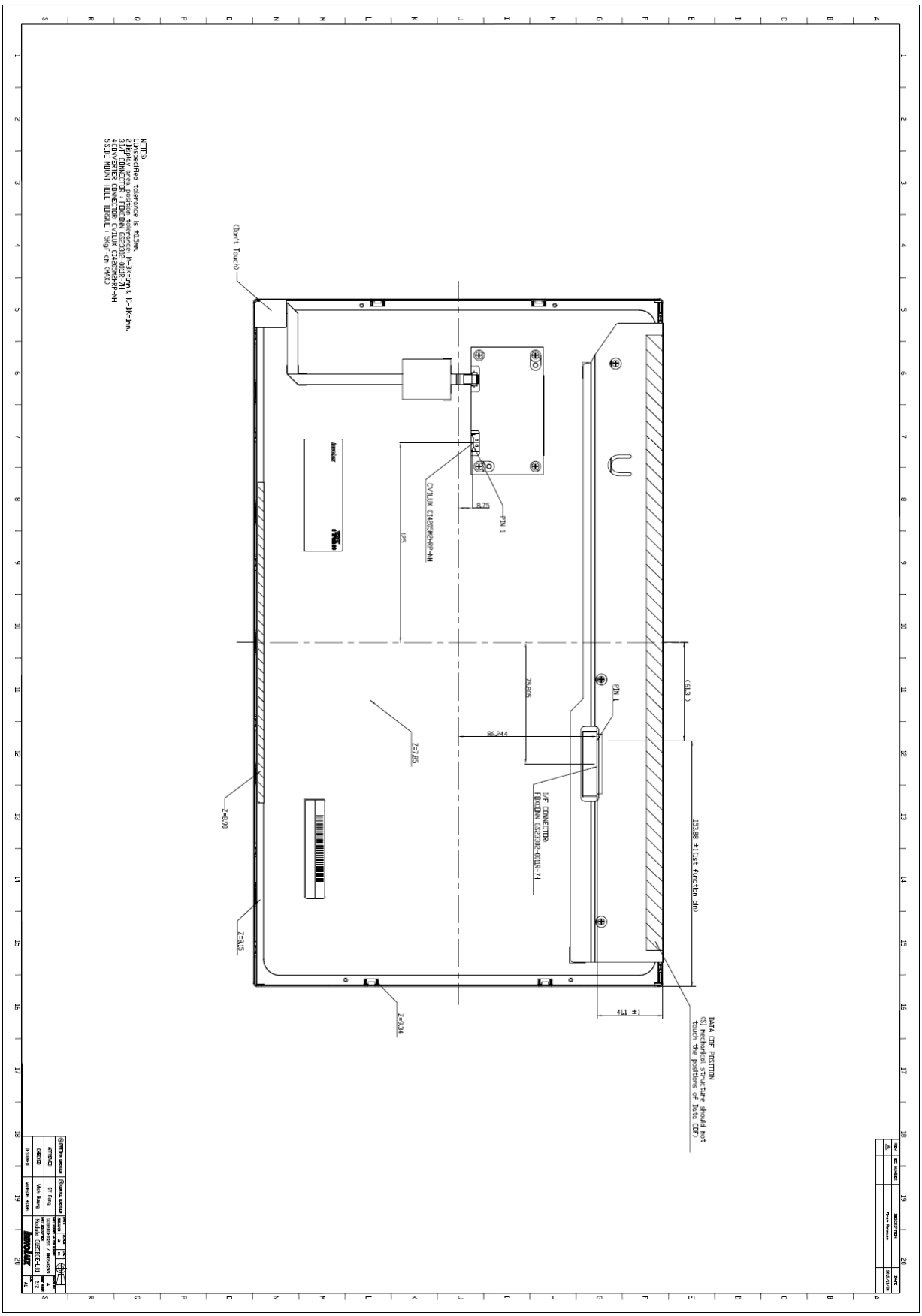

The copyright belongs to CHIMEI InnoLux. Any unauthorized use is prohibited.

Our company network supports you worldwide with offices in Germany, Austria, Switzerland, the UK and the USA. For more information please contact:

Headquarters

Germany

FORTEC Elektronik AG
Lechwiesenstr. 9
86899 Landsberg am Lech

Phone: +49 8191 91172-0
E-Mail: sales@fortecag.de
Internet: www.fortecag.de

Fortec Group Members

Austria

FORTEC Elektronik AG
Office Vienna
Nuschinggasse 12
1230 Wien

Phone: +43 1 8673492-0
E-Mail: office@fortec.at
Internet: www.fortec.at

Germany

Distec GmbH
Augsburger Str. 2b
82110 Germering

Phone: +49 89 894363-0
E-Mail: info@distec.de
Internet: www.distec.de

Switzerland

ALTRAC AG
Bahnhofstraße 3
5436 Würenlos

Phone: +41 44 7446111
E-Mail: info@altrac.ch
Internet: www.altrac.ch

United Kingdom

Display Technology Ltd.
Osprey House, 1 Osprey Court
Hichingbrooke Business Park
Huntingdon, Cambridgeshire, PE29 6FN

Phone: +44 1480 411600
E-Mail: info@displaytechnology.co.uk
Internet: www. displaytechnology.co.uk

USA

Apollo Display Technologies, Corp.
87 Raynor Avenue,
Unit 1Ronkonkoma,
NY 11779

Phone: +1 631 5804360
E-Mail: info@apollodisplays.com
Internet: www.apollodisplays.com